IEEE Access
Multidisciplinary ⋮ Rapid Review ⋮ Open Access Journal

Received 12 December 2024, accepted 26 December 2024, date of publication 14 January 2025, date of current version 29 January 2025.

Digital Object Identifier 10.1109/ACCESS.2025.3529812

TOPICAL REVIEW

Heavy and Lightweight Deep Learning Models for Semantic Segmentation: A Survey

CRISTINA CĂRUNTA[1], ALINA CĂRUNTA[2], AND CĂLIN-ADRIAN POPA[1], (Member, IEEE)
[1]Department of Computers and Information Technology, Politehnica University of Timişoara, 300223 Timişoara, Romania
[2]Department of Computer Science, West University of Timişoara, 300223 Timişoara, Romania

Corresponding author: Călin-Adrian Popa (calin.popa@cs.upt.ro)

ABSTRACT Semantic segmentation is an important computer vision task due to its numerous real-world applications such as autonomous driving, video surveillance, medical image analysis, robotics, augmented reality, among others, and its popularity increased with the development of deep learning approaches. We provide a detailed review comprising the most significant methods for both heavy and lightweight two-dimensional (2D) semantic segmentation, starting with the introduction of convolutional neural networks until the use of Transformer architecture, the latter being a widely adopted model with state-of-the-art results in several artificial intelligence fields. The methods involved are described from the architectural design perspective, including encoder-decoder architectures, multi-resolution branches approaches, two-pathway encoder architectures, attention-based models, and pyramid-based models. Additionally, some of the most popular datasets and performance metrics are presented. Further, we investigate the limitations of these methods, compare their performance on Pascal VOC 2012, Cityscapes, and ADE20K datasets, and finally indicate future research directions.

INDEX TERMS Complex deep learning models, convolutional neural networks, real-time models, semantic segmentation, Transformer model.

I. INTRODUCTION

Semantic image segmentation is a significant computer vision task, having various real-world applications. Semantic segmentation involves assigning a label to each pixel of an input image from a specific label set (e.g., car, tree, person), see Figure 1, being a more challenging task than image classification, where a single label is predicted for the entire image.

Various semantic segmentation methods have been proposed in the literature, starting from the traditional algorithms, including thresholding [2], region-growing [3], K-means clustering [4], to the more advanced deep learning methods that achieved state-of-the-art results. Different convolutional neural networks (CNNs) architectures (e.g., VGG [5], GoogleNet [6], ResNet [7]) appeared to be successful for the image classification task, therefore these networks led to the emergence of novel solutions to semantic segmentation. In contrast to traditional methods, where semantic features are manually extracted from the image, CNNs automatically extract them, being an end-to-end process. FCN [8] represents the first work which proposed CNNs for the semantic segmentation task.

FIGURE 1. Semantic segmentation example. From [1].

Through the years, the efforts made in improving the semantic segmentation accuracy have been elaborated by the multiple surveys published. These surveys can be divided into several categories based on their specific focus. Therefore, we have: (1) surveys that give a global overview of the topic emphasizing architectural design of heavy deep learning models such as [67], [68], [69], [70], [71], and [72]; (2) real-time processing models, for instance, [73], [74], [75],

The associate editor coordinating the review of this manuscript and approving it for publication was Maria Chiara Caschera.

© 2025 The Authors. This work is licensed under a Creative Commons Attribution 4.0 License.
For more information, see https://creativecommons.org/licenses/by/4.0/

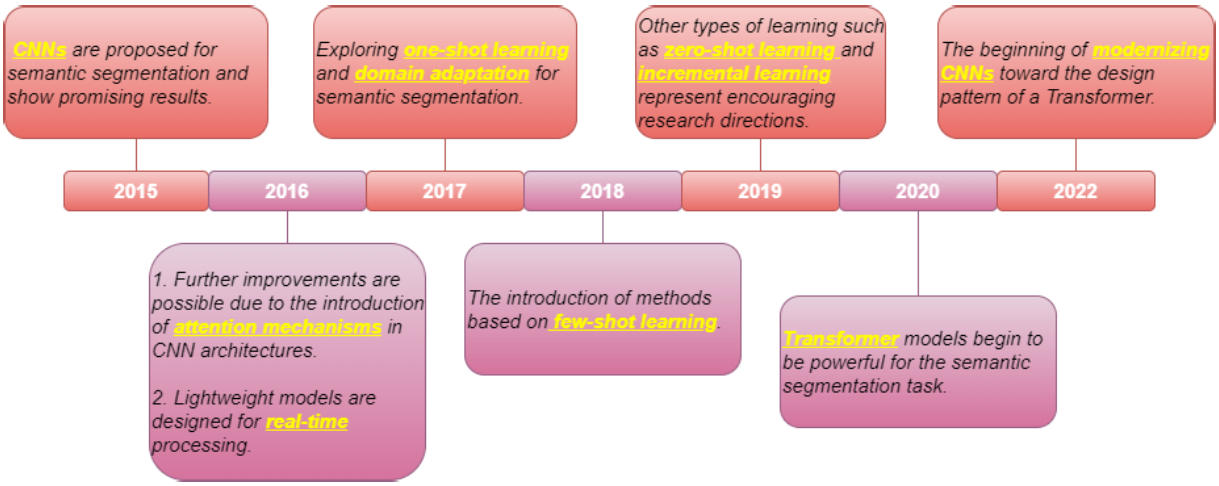

FIGURE 2. Key aspects in designing semantic segmentation architectures.

[76], [77]; (3) reviews regarding segmentation results related issues, including [78]; (4) Vision Transformer-based surveys, such as [79] and [104]. All these recent surveys are concerned with supervised learning, being the most explored learning type compared to unsupervised, weakly-supervised, semi-supervised, or reinforcement learning. Supervised learning methods also provide the best results so far.

Although the first three categories of surveys cover many CNNs methods in detail, the new trend of using the Transformer model is narrowly presented or is not discussed at all, either for complex models or real-time ones. The articles in the fourth category aim to outline Vision Transformers in semantic segmentation, but it lacks a description of Transformer models designed for real-time processing.

This survey falls into the category of supervised learning methods, examining architectural designs and their limitations. The main contributions of this survey include a comprehensive presentation under the same umbrella of both complex and lightweight semantic segmentation architectures, and it introduces the recently developed lightweight Transformer models targeting high performance in the real-time setting. Figure 2 shows a chronological presentation of semantic segmentation developments based on the appearance of various deep learning techniques.

The rest of this survey is divided into the following sections: Section II introduces the most popular datasets and the most commonly used evaluation metrics. The next section, Section III, details the most important heavy deep learning models that obtained outstanding results, while Section IV presents deep learning-based models that are concerned with fast semantic segmentation systems with good enough accuracy. Section V outlines the promising research directions, and the conclusions are presented in the last section, Section VI.

II. DATASETS AND PERFORMANCE METRICS

Through the years, plenty of public datasets were developed for the semantic segmentation task, and most of the research has concentrated on 2D images. The most representative 2D image datasets that are used to compare the performance of different deep learning algorithms include MS COCO [202], Pascal VOC 2012 [9], Pascal Context [10], Pascal-Part [205], Cityscapes [11], GTA5 [52], KITTI [203], CamVid [12], ADE20K [13], SYNTHIA [55], and Stanford Background [206].

MS COCO (Microsoft Common Objects in Context) [202] is a large dataset that can be used in many tasks, such as: segmentation, object detection, key-point detection, and image captioning. The dataset contains varying-size images of complex everyday scenes with 118K train images and 5000 validation images for the semantic segmentation task. The number of classes is 80.

Pascal Visual Object Classes (VOC) 2012 [9] is a well-known dataset in computer vision, suited for a variety of tasks, such as classification, segmentation, action recognition, detection, and person layout. Regarding the segmentation task, it contains 20 classes (e.g., car, bird, person, etc.), 1464 training images, 1449 validation images, and a private test set. This dataset has various sizes for the images.

Pascal Context [10] is a dataset with 400+ classes, but in general it uses only 59 classes, the rest being set as background. It has 4998 training images, 5105 validation images, and 9637 testing images. Similar to Pascal VOC 2012, images don't have a fixed size.

Pascal-Part [205] is a human semantic part segmentation dataset with 1716 training images and 1817 testing images of varying sizes. It provides 6 classes, (i.e., it has 6 body parts pixel-wise annotations).

Cityscapes [11] is an urban street view large dataset. It consists of 19 classes and 2975/500/1525 training, validation, and testing images, respectively. All the images have a fixed width of 2048 and a height of 1024 (2048 × 1024 resolution).

GTA5 (Grand Theft Auto 5) [52] is a street view dataset having 24966 images and 19 classes compatible with the ones

TABLE 1. Popular semantic segmentation datasets.

Dataset	Training	Validation	Testing	Classes	Resolution
MS COCO [207]	118K	5000	-	80	vary in size
Pascal VOC 2012 [9]	1464	1449	-	20	vary in size
Pascal Context [10]	4998	5105	9637	59	vary in size
Pascal-Part [211]	1716	-	1817	6	vary in size
Cityscapes [11]	2975	500	1525	19	2048 × 1024
GTA5 [52]	-	-	-	19	1914 × 1052
KITTI [208]	-	-	-	3	vary in size
CamVid [12]	367	101	233	11	960 × 720
ADE20K [13]	20K	2000	-	150	vary in size
SYNTHIA [55]	-	-	-	13	1280 ×960
Stanford Background [213]	-	-	-	8	320 × 240

of the Cityscapes dataset. The resolution of the images is 1914 × 1052.

KITTI [203] is a very popular dataset for autonomous driving, but the original version does not include ground truth for semantic segmentation. Reference [204] introduced semantic segmentation ground truth for 323 images with 3 classes. The size of the images is not fixed.

CamVid (Cambridge-driving Labeled Video Database) [12] is another driving scene parsing dataset with 32 classes and only a few samples, i.e., 367 training, 101 validation, and 233 testing images. Only 11 classes are employed to perform semantic segmentation tasks. The size of the images is 960 × 720.

ADE20K [13] is a complex dataset with various scenes, including both indoor and outdoor scenes. It contains 150 classes, 20K training images, and 2000 validation images. The size of the images is not fixed.

SYNTHIA (SYNTHetic Collection of Imagery and Annotations) [55] is a synthetic dataset consisting of 9400 images of resolution 1280 × 960. There are 13 classes for this dataset.

Stanford Background [206] contains 715 outdoor images of scenes with 8 classes. The size of the images is 320 × 240.

Other 2D image datasets for semantic segmentation purposes include Semantic Boundaries Dataset (SBD) [207], Berkeley Segmentation Dataset (BSD) [208], COCO-Stuff [238], and YouTube-Objects [209].

The strengths of semantic segmentation datasets include: *(i)* pixel-level annotations for each object in an image, enabling models to precisely locate various areas within the image; *(ii)* through labeling all pixels, these datasets allow models to understand entire scenes by capturing contextual and object-level information; *(iii)* real-world use cases such as autonomous driving (Cityscapes, KITTI, CamVid, GTA5, SYNTHIA), medical imaging, urban planning, etc.; *(iv)* diverse datasets such as MS COCO, Pascal VOC 2012, Pascal Context, and ADE20K may help models to better generalize across different types of scenes.

Among the shortcomings of semantic segmentation datasets are: *(i)* errors introduced by manual pixel-level annotations; *(ii)* class imbalance, i.e., the background class often dominates in many datasets, which may cause the model to perform better on these classes than the important ones, or some object classes may appear rarely; *(iii)* low-resolution images that make it difficult to capture fine-grained details. Therefore, improving the quality of annotations, handling class imbalance, and developing more diverse datasets may be taken into consideration by researchers and practitioners for progressing towards better supervised semantic segmentation models.

Table 1 summarizes the characteristics of the previously discussed semantic segmentation datasets.

In the following, the commonly used metrics for evaluating the segmentation models' performance are presented.

Pixel Accuracy represents the percent of correctly predicted pixels in the image (1).

$$PA = \frac{\sum_{i=1}^{C} p_{ii}}{\sum_{i=1}^{C} T_i}, \tag{1}$$

where p_{ii} represents the number of pixels belonging to class i and predicted as class i, C is the number of classes, and T_i is the number of pixels belonging to class i.

Mean Pixel Accuracy represents the percentage of pixels that were properly categorized per-class, averaged over all the classes (2).

$$mPA = \frac{1}{C} \sum_{i=1}^{C} \frac{p_{ii}}{T_i}. \tag{2}$$

Intersection over Union constitutes the dominant metric used in semantic segmentation, and it is calculated for each class as shown in (3).

$$IoU = 100 \times \frac{TP}{TP + FN + FP}, \tag{3}$$

where

- TP is the number of pixels belonging to the class and correctly classified to that class;
- FN is the number of pixels belonging to the class, but wrongly classified as a different class;
- FP is the number of pixels belonging to a different class, but classified as the class.

Mean Intersection over Union indicates the average IoU over all the classes (4), and this metric is reported by the most

research articles.

$$mIoU = \frac{1}{C}\sum_{i=1}^{C} IoU_i. \tag{4}$$

III. COMPLEX DEEP LEARNING MODELS FOR SEMANTIC SEGMENTATION

In this section, we present heavy deep learning architectures that are focused on obtaining the best results in terms of segmentation accuracy. Hence, semantic segmentation works that combined deep learning components in an original fashion and obtained encouraging results are given. These works are divided into two dominating architectural design directions, including convolutional neural networks and Transformer-based structures.

A. CNN MODELS

Most of the semantic segmentation models are split between an encoder stage and a decoder one. The encoder network is responsible for the relevant features extraction, while the decoder network tries to reconstruct a high-quality segmentation mask.

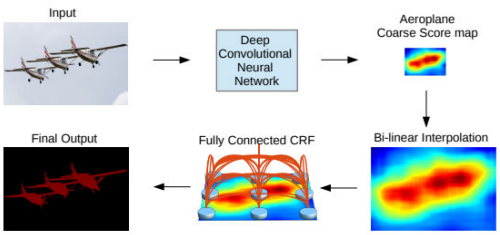

FIGURE 3. DeepLabV1 model. From [17].

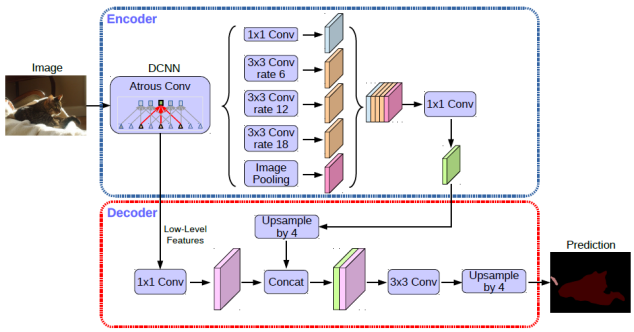

FIGURE 4. DeepLabV3+ architecture. From [81].

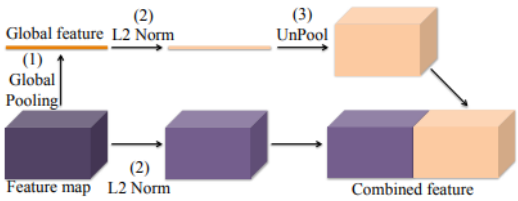

FIGURE 5. ParseNet contextual module. From [15].

Article [8], the initial use of CNNs for semantic segmentation, utilizes an encoder-decoder structure, Figure 8. Three successful classification networks (AlexNet [14], VGG [5], GoogleNet [6]) are adapted for the segmentation encoder. The decoder produces the segmentation map by the means of skip connections that upsample and fuse the feature maps of the final layers with feature maps of the earlier layers. Figure 9 gives the overall architecture of the FCN model, omitting the intermediate convolutional layers and emphasizing the fusion mechanism. Three model variants are developed, namely FCN-32s, FCN-16s, and FCN-8s. The first one uses only the last stage of the encoder for the final prediction, while the other two variants employ the fusion of the last and penultimate stages (FCN-16s), or fuse the last three stages of the backbone (FCN-8s). From their experimental results we can notice that FCN-8s and FCN-16s obtained better performance than FCN-32s, denoting that the fusion of the intermediate feature maps produced by the encoder's stages plays a significant role in the final segmentation. Hence, researchers are currently working to create effective decoders that make use of both high-level semantic knowledge and low-level features.

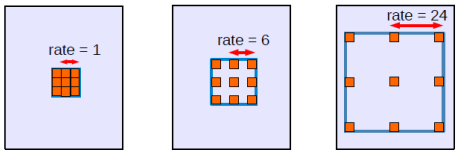

FIGURE 6. Dilated convolutions with 3 × 3 kernel and different dilation rates (1, 6, and 24). From [80].

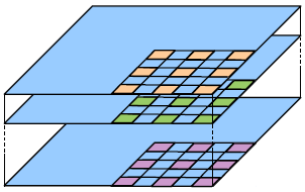

FIGURE 7. Dilated separable convolution. From [81].

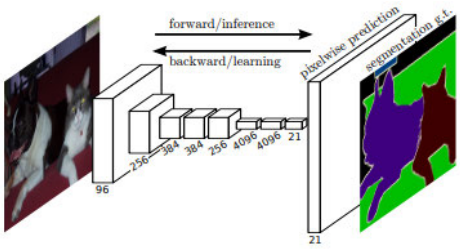

FIGURE 8. FCN model. From [8].

ParseNet [15] is another state-of-the-art model that builds upon FCN [8] by adding a global context module presented in Figure 5. The feature map of the module is normalized, unpooled, and then concatenated, resulting in a new feature map having the same size as the initial one. This module captures contextual information from the image, an important aspect when tackling per pixel classification. DeconvNet [16] consists of a VGG-16 [5] encoder and a

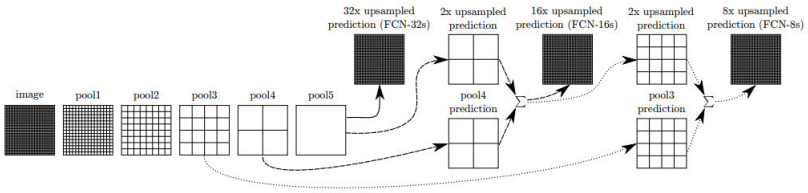

FIGURE 9. High-level FCN architecture illustrating the fusion mechanism. From [8].

decoder that upscales the low-dimensional feature maps using transposed convolutions and unpooling layers. Their deep deconvolution network mitigates the limitations of previous works based on CNNs such as: (1) fixed-size receptive field (objects that are larger/smaller than the receptive field can be incorrectly labeled); and (2) coarse segmentation of object boundaries.

DeepLabV1 [17] used a deep CNN for feature extraction and a bilinear interpolation stage for upscaling the feature maps to the original input image size, Figure 3. DeepLabV2 [25], DeepLabV3 [80], and DeepLabV3+ [81] represent continuously improved versions. DeepLabV2 [25] extended the first version by adding atrous/dilated convolutions (a method in which the kernel is enlarged by inserting zeros between its values, see Figure 6) and an atrous spatial pyramid pooling (ASPP) module. The deep convolutional neural network employed is VGG-16 [5] or ResNet-101 [7]. Because the receptive field is a key issue in visual tasks, as the output feature should cover a large area in the input image for capturing large objects information, dilated convolutions are able to enlarge it without increasing the number of learnable parameters. The ASPP module improves the segmentation of multi-scale objects by implementing multiple parallel dilated convolutional layers with different dilation rates. Given the advantages of dilated convolutions, i.e., large receptive field without increasing the number of parameters and multi-scale features extraction, most of the semantic segmentation models apply this type of convolutional layer either in the encoder modules or in the decoder part. DeepLabV3 [80] further boosts the segmentation performance by modifying the ASPP module and inserting more ResNet blocks containing dilated convolutions. More such ResNet blocks have the advantage of not deteriorating the detail information. The improved ASPP module additionally includes global average pooling and 1×1 convolution. In this way, the module is capable of better enhancing the global context information. The last DeepLab family version is DeepLabV3+ [81]. This architecture proposed an Xception-based encoder [31] that applies dilated separable convolutions (i.e., dilated convolutions applied over each input channel, Figure 7), and replaced the bilinear interpolation stage with an effective decoder. The overall architecture is depicted in Figure 4. The DeepLabV3+ semantic segmentation architecture served as inspiration for numerous research articles that redesigned many variations of this for various tasks (e.g., [229], [230], [231], [232], [233]).

In order to improve the segmentation of local boundary and small-scale objects, [211] proposed a modified approach to DeepLabV3+. Specifically, it introduced an improved variant of the ASPP module, an effective feature fusion method, and a detailed attention mechanism. The improved ASPP takes as input the feature maps produced by the encoder, and passes them through atrous convolutions with different dilation rates to increase the receptive field. Next, the concatenation of these features is sequentially processed by other dilated convolutions to strengthen the model's representation. Additionally, it adopts a multi-core pooling module, i.e., the feature maps are processed by average pooling layers with different kernel sizes, for realizing the gradual refinement of target features. The fusion mechanism is designed to divide the backbone network and the improved ASPP module into three stages. It uses jump connection to effectively fuse the feature maps of each stage. The detailed attention mechanism is placed in the decoder part, and integrates the self-attention mechanism into channel attention, and the one-dimensional convolution into a spatial one.

The transfer of the attention mechanisms from the natural language processing tasks to the computer vision field has brought significant improvements, therefore multiple semantic segmentation articles adopt this mechanism. For example, [82] integrated an attention mechanism into the DeepLab [17] architecture in order to determine the importance of features at various scales and positions. The architecture showed that using multi-scale inputs, fusing multi-scale features with the suggested attention mechanism, and adding extra supervision at the end of the network for each scale boost the segmentation performance. For better capturing the global context, there are articles that employed the attention mechanism into the CNN structure, such as: DANet [1], CCNet [83], [166], SANet [84], FLANet [85], FsaNet [22], AGLN [167], CANet [172], CTNet [173], GPNet [176], RANet [182], [185], CDN [186].

RefineNet [86] tackled the issue of initial image resolution decrease by the frequent subsampling operations. The model effectively makes full use of the ResNet encoding information via long-range residual connections for a better high-resolution prediction. FRRN [18] proposed a ResNet-like architecture yielding a superior performance. The architecture consists of two streams, one stream maintains the image resolution for a better localization, while the second one follows a series of pooling and unpooling operations for robust feature recognition, Figure 12. Bilinear

interpolation is used for upscaling the feature maps. The proposed full-resolution residual unit (FRRU) takes two inputs, pooling stream input and residual input, that are merged and passed through two 3×3 convolutional layers followed by batch normalization layer and ReLU activation function. This unit has two outputs, one output that is processed by the next FRRU is the result, r, of the two 3×3 convolutions, and the second one passes r through a 1×1 convolution and adds it to the residual input, which is further processed by the residual stream. In this manner, the ResNet-like architecture shows strong localization and recognition performance.

Semantic segmentation is concerned with the classification and localization tasks concurrently. Therefore, as stated in [87], large kernels are of paramount importance for semantic segmentation than stacking the widely adopted 3×3 kernels. [87] proposed a convolutional network with large kernels that addresses classification and localization issues, and also came up with a boundary refinement block to enhance the performance close to object boundaries. This block is used multiple times within the decoder and consists of two 3×3 convolutions and a residual connection. Being a lightweight module, it can be easily integrated into real-time architectures.

Targeting to better capture global context in the image, PSPNet [29] introduced the pyramid pooling module. The feature map from the ResNet-101 [7] backbone is pooled at various sizes and passed through a convolutional layer. Then, these features are upsampled and concatenated with the original feature map to be further processed by the decoder. Also, an optimization procedure was employed, namely an auxiliary loss was added after a certain ResNet block. All these strategies have led to a better framework for semantic segmentation. The architecture is presented in Figure 10. EncNet [88] is another research direction concerned with the global contextual information. Different from PSPNet [29], EncNet added a context encoding module on top of the CNN backbone. This module employs an encoding layer [36] and incorporates a semantic encoding loss. These components force the network to understand the global semantic information.

For the semantic segmentation task, an innovative module was introduced in [89] for enhancing CNNs to model geometric transformations (e.g., object scale). This module is entitled deformable convolution. As mentioned in [89], deformable convolution adds two-dimensional (2D) offsets to the regular grid sampling locations in the standard convolution. The offsets are learned, and thus will let the kernel shape to adapt to the complex geometric transformations in the input. A representative illustration for this module is depicted in Figure 13. An advantage for this module is its lightweight nature, i.e., it adds few parameters and requires less computation for the offset learning. Using this type of convolutions makes semantic segmentation more performant, for instance, [90] combined deformable convolutions with the Transformer model and achieved 86.1% mIoU for the Cityscapes dataset.

Paper [91] extended DenseNets [35], an architecture that showed very good results on the image classification task. The novelty of DenseNets lies in the dense block construction that contains repeated concatenations of the feature maps. Thus, the architecture becomes easier to train and obtains more accurate results. Similarly, DenseASPP [92] exploited a dense connection of dilated convolutional layers, which correctly encodes the multi-scale information.

In spite of the great success achieved by the Transformer model, SegNeXt [93] promotes supplementary exploration of CNNs due to their high potential. This paper suggested an efficient convolutional attention module for a better encoding of the contextual information. One stage of the encoder block with a detailed representation of the attention module is presented in Figure 11. The architecture maintains a low computational cost due to the use of factorized depthwise convolutions in the convolutional attention mechanism, and performs better than Vision Transformers. Another research article, ConvNeXt [40], successfully reached the performance of the Transformer using only convolutions. The architecture follows the Transformer design pattern, but replaced the Transformer blocks with the ConvNeXt blocks. A ConvNeXt block is a residual block consisting of one 7×7 depthwise separable convolution and two 1×1 convolutions. The GELU nonlinearity is employed together with the layer normalization technique.

A strong backbone for computer vision tasks is HRNet [24], which keeps high-resolution representations throughout the entire learning process, similarly to FRRN [18] purpose. The essential characteristics of this architecture include parallel structure of high-to-low resolutions and repeated data exchange between resolutions, Figure 14. Maintaining high-resolution representations makes HRNet a superior architecture for position-sensitive tasks, including semantic segmentation.

Other promising works that proposed CNN architectures are: U-Net [179], Ghost-UNet [180], CGBNet [23], [177], ExFuse [190], SoENet [178], [181], MRACN [183], FDNet [188], [189], Ince-DResAsppNet [192], SERNet-Former [215].

B. TRANSFORMER MODELS

The computer vision field was transformed by the advent of the Vision Transformer (ViT) [38] model. Even though it has a high computational cost, its superior performance makes it a widely adopted architecture. Regarding the semantic segmentation task, this model is in the early phases of its expansion.

SETR [94] considered the semantic segmentation task using a Transformer perspective. The authors employed a standard Transformer encoder, and thus the global context is modeled in each Transformer layer. The proposed CNN decoders are simple, but joined with the encoder lead to superior segmentation accuracy. TrSeg [95] opted for a structure opposite to SETR [94], i.e., a CNN encoder and a

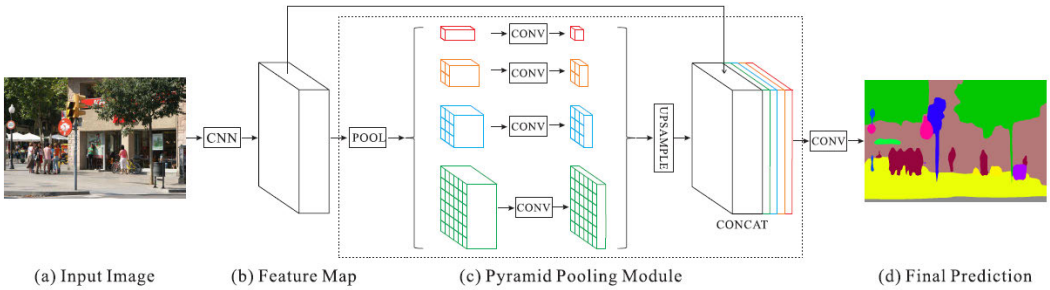

FIGURE 10. PSPNet architecture. From [29].

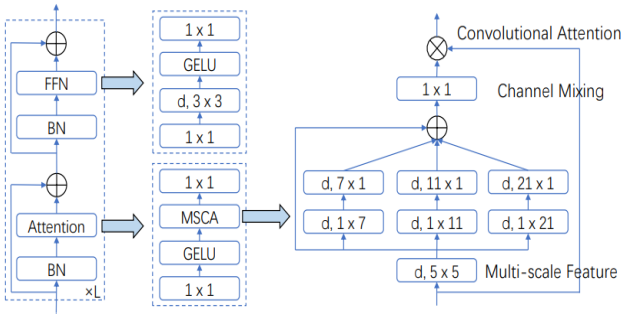

FIGURE 11. One stage of the SegNeXt encoder. 'd' represents depthwise separable convolution. From [93].

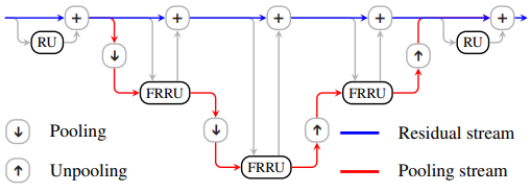

FIGURE 12. FRRN high-level architecture. From [12].

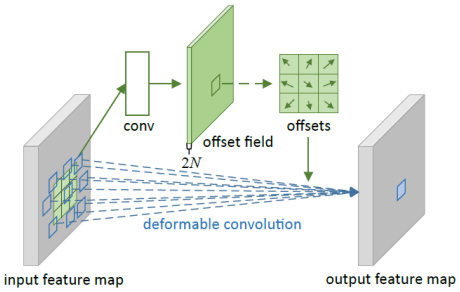

FIGURE 13. Example of 3 × 3 deformable convolution. From [89].

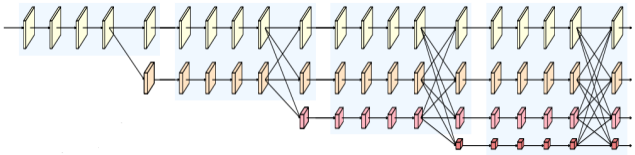

FIGURE 14. HRNet model. From [24].

Transformer decoder. A convolution-free approach is Segmenter [96], which used ViT [38] as backbone and introduced a mask transformer decoder.

To address both context information and boundary refinement issues, UN-EPT [97] proposed a unified semantic segmentation network. An adapted attention mechanism is introduced for enhancing context modeling, and a spatial branch is added to the network for accurate object boundaries segmentation.

PVT [98] is a convolution-free pyramid structure backbone designed specifically for reducing computational costs involved in the Transformer model, and also for producing feature maps at various scales, while ViT [38] is at the opposite side. A spatial-reduction attention module (SRA) is employed to facilitate high-resolution feature maps processing. Similar to the multi-head attention module, the inputs for the SRA are the query, key, and value, but the difference lies in the spatial reduction of the key and value before feeding into the attention operation. Hence, the computational cost of SRA is lower than that of multi-head attention. The architecture is depicted in Figure 15. Studying the limitations of PVT [98] (i.e., high computational cost for processing high-resolution images, continuity loss of the image because of the non-overlapping patches scheme, and the lack of processing various resolution images as a result of the fixed-size position embedding), has led to the emergence of PVT V2 [99], which solves all the mentioned issues. Precisely, their SRA variant uses average pooling for spatial reduction, and not convolutions as in PVT [98]. In addition to the layers involved in the feed forward network of PVT, they integrated a depthwise convolution. With these modifications, the experimental results on ADE20K dataset surpass all variants of PVT. Another strong backbone for semantic segmentation is HRViT [100]. This multi-branch network was inspired by the successful HRNet [24] model, but it uses Transformer blocks in the encoding process. This Transformer block is based on a state-of-the-art attention mechanism, i.e., cross-shaped self-attention [234].

In order to reduce the computational complexity of the multi-head self-attention mechanism (MHSA) in Vision Transformers, P2T [101] incorporated pyramid pooling to MHSA. The pooling-based MHSA applies average pooling layers onto the input features for generating pyramid feature maps. Next, these new feature maps are passed through depthwise convolution, flattened and, in the end, are concatenated. The resulted feature maps contain contextual information

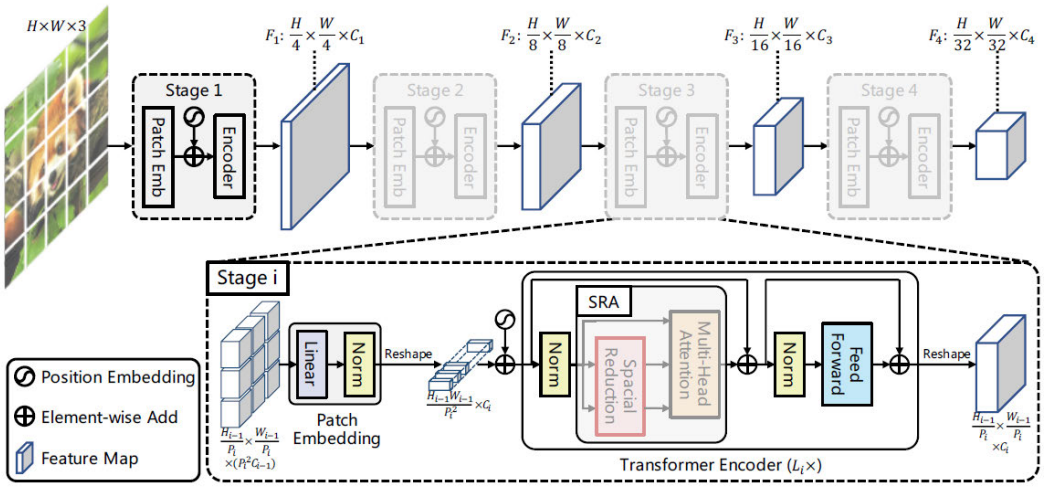

FIGURE 15. Pyramid vision transformer architecture. From [98].

and can successfully substitute the initial feature maps when calculating MHSA.

The patches extraction problem in ViT, i.e., high-resolution images will lead to numerous image tokens, is the main concern of Swin Transformer [34]. Exploring large patches is problematic for semantic segmentation, where the detailed information at pixel-level is very important. Swin Transformer still relies on patches, but instead of fixing a certain patch size at the beginning and continuing with it while encoding the information, Swin Transformer starts with small patches and then gradually merges them into bigger ones in deeper Transformer layers. The Transformer layers process the patches with the proposed shifted window based self-attention mechanism, i.e., the attention is limited to a certain number P of patches. Therefore, instead of computing the attention for all image tokens at once, the attention is limited to these P patches, thus reducing computational complexity. After processing the patches in the Transformer layer with limited attention, the next layer, i.e., the merging layer, concatenates them and then they are passed again through linear projection. This hierarchical process is repeated multiple times. Swin Transformer's strategy successfully captures both local and global features.

Multi-scale representations are enhanced in the Lawin [102] model. The encoder used is MiT [39] or Swin Transformer [34], while the proposed decoder, LawinASPP, consists of large window attention modules.

InternImage [90], Figure 16, is a successful model for the Cityscapes dataset, hitting 86.1% mIoU on the test set. The model follows the Transformer pattern, but replaces the multi-head self-attention module with the deformable convolution operator.

Other Transformer-based architectures include DPT [103], FTN [105], [106], SegVit [107], PFT [108], [169], Paumer [170], FSFormer [171], DSCT [175], TSG [191],

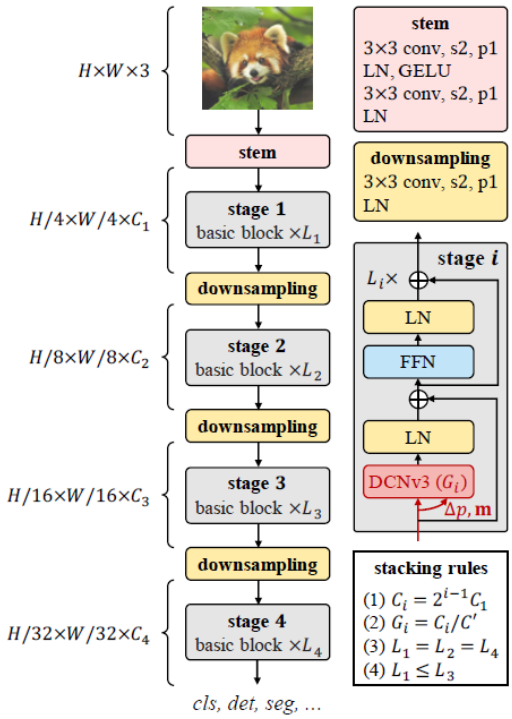

FIGURE 16. InternImage architecture. From [90].

ONE-PEACE [37] (the best accuracy, 63.0% mIoU, for the ADE20K dataset).

Semantic segmentation training protocols are often the same across most works, whether they are for heavy or lightweight models. These include: encoder pre-training on the ImageNet dataset [199] for obtaining fast convergence, adopting the poly strategy to update the learning rate, using different data augmentations, and selecting the appropiate

optimizer, usually SGD or Adam. In general, the pre-training on ImageNet is done for 100 epochs at a 224 × 224 image resolution. Regarding the inference speed of real-time models, many works adopt RTX 3090 in order to fairly compare the performance of the models.

Table 2 summarizes the performance of several significant complex deep learning models. The methods are given in chronological order according to the year of publication.

IV. REAL-TIME DEEP LEARNING MODELS

A major problem with the previously discussed deep learning architectures, Section III, is their applicability in real-world scenarios. Even though the performance achieved is impressive, the inference time is very high, thus, there is a need to construct models that are both highly accurate and adequate for real-time applications. This section presents such models, compares the obtained performance, and discusses their limitations. The research articles belong to the following five architectural design categories: encoder-decoder, multi-resolution branches, two-pathway encoder, attention-, pyramid-, and Transformer-based.

A. ENCODER-DECODER

The first work that was developed specifically for real-time semantic segmentation is ENet [109]. The architecture consists of a sequence of bottleneck modules. These modules take the input, passes it through two convolutional branches and, in the end, concatenates them. The intention behind the choice of the architecture was to attain at least 10 frames per second (fps), making it acceptable for real-time operation. SegNet [110] also targeted scene understanding applications, and thus a lightweight architecture was created. In spite of having a high inference speed, the low accuracy, less than 60%, requires the exploration of other, more performant architectures. Its architecture has an encoder network similar to VGG-16 [5]. The feature maps produced by the encoder are upscaled in a novel way by the decoder using max-pooling indices of the feature maps.

LinkNet's [111] strategy of linking the encoder and decoder seeks to avoid increasing the number of learnable parameters. The shallow encoder network is ResNet-18 [7]. Another architecture suitable for scene understanding applications is ERFNet [112]. The authors proposed a new residual layer, Figure 17, that uses factorized convolutions with the goal of reducing the computational costs. Experimental results exhibit an increase in accuracy if the last two convolutions, i.e., 3 × 1 and 1 × 3, are replaced with a pair of dilated convolutions. ShuffleSeg [113] is an adaptation of ShuffleNet [26] for semantic segmentation. Concretely, it uses grouped convolutions and the channel shuffling scheme.

A distinctive architecture for speed-required applications is ShelfNet [114]. It uses several encoder-decoder pairs and a shared-weights strategy. An additional unique architecture that was first introduced for the semantic segmentation task is HyperSeg [115], which is based on Hypernetworks [27].

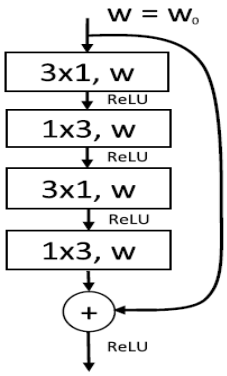

FIGURE 17. ERFNet residual layer. From [112].

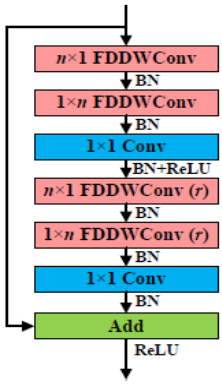

FIGURE 18. FDDWNET residual layer. From [116].

This idea of using a network (also called hypernetwork) to produce weights for another network led to superior results.

Deeper architectures are usually bypassed for real-time semantic segmentation. However, FDDWNET [116] inclined towards such a structure. Their residual module, Figure 18, used in both encoder and decoder, utilizes factorized dilated depthwise separable convolutions. Although the proposed module consists of more convolutional layers than other modules targeting real-time objectives, the final architecture has less than 1M parameters.

A network that retains high-resolution feature maps during the training process was proposed in ERPNet [117]. The module responsible for this is inspired by the residual layer in ERFNet [112]. Additionally, a feature refinement module was developed for high accuracy. ResNet-18 [7] and MobileNetV3 [28] were used for the feature extraction process. FFNet [118] is a straightforward architecture that uses a ResNet backbone and a lightweight convolutional decoder. Hence, this shallow structure shows competitive results with state-of-the-art methods.

DMPNet [210] achieves a good trade-off between accuracy and speed by employing a combination of factorized, depthwise, and standard convolutions in their proposed EMCA module used in both encoder and decoder. Also, they devised the strategy of integrating pyramid pooling modules (PPMs) [29] at the end of each encoder stage, rather than immediately following just the final stage, as most architectures

TABLE 2. Performance of complex semantic segmentation models. ('$\mathbb{T}/\mathbb{V}$' represents test/validation set).

Method	Year	Backbone	mIoU VOC 2012	mIoU Cityscapes	mIoU ADE20K
FCN [8]	2015	VGG-16	62.2 $\mathbb{T}$	-	-
DeconvNet [16]	2015	VGG-16	72.5 $\mathbb{T}$	-	-
ParseNet [15]	2016	VGG-16	69.8 $\mathbb{T}$	-	-
RefineNet [90]	2017	ResNet-152	83.4 $\mathbb{T}$	-	40.7 $\mathbb{V}$
		ResNet-101	-	73.6 $\mathbb{T}$	-
PSPNet [30]	2017	ResNet-101	85.4 $\mathbb{T}$	80.2 $\mathbb{T}$	-
		ResNet-269	-	-	44.94 $\mathbb{V}$
DeepLabV3+ [84]	2018	Xception	89.0 $\mathbb{T}$	82.1 $\mathbb{T}$	-
DenseASPP [96]	2018	DenseNet-161	-	80.6 $\mathbb{T}$	-
EncNet [92]	2018	ResNet-101	85.9 $\mathbb{T}$	-	44.65 $\mathbb{V}$
DANet [1]	2019	ResNet-101	82.6 $\mathbb{T}$	81.5 $\mathbb{T}$	-
FDNet [193]	2019	-	84.2 $\mathbb{T}$	-	-
CFNet [205]	2019	ResNet-101	87.2 $\mathbb{T}$	79.60 $\mathbb{T}$	44.89 $\mathbb{V}$
CCNet [87]	2020	ResNet-101	-	81.9 $\mathbb{T}$	45.76 $\mathbb{V}$
SANet [88]	2020	ResNet-101	83.2 $\mathbb{T}$	-	-
CDN [191]	2020	-	85.7 $\mathbb{T}$	80.5 $\mathbb{T}$	55.27 $\mathbb{T}$
HRNet [24]	2021	HRNetV2-W48	-	82.5 $\mathbb{T}$	-
SETR [98]	2021	ViT-L	-	81.64 $\mathbb{T}$ 82.15 $\mathbb{V}$	50.28 $\mathbb{V}$
TrSeg [99]	2021	DRN [202]	-	79.9 $\mathbb{T}$	-
Segmenter [100]	2021	ViT-L	-	81.3 $\mathbb{V}$	53.63 $\mathbb{V}$
PVT [102]	2021	PVT-Large	-	-	44.8 $\mathbb{V}$
Swin [35]	2021	Swin-L	-	-	53.5 $\mathbb{V}$ 62.8 $\mathbb{T}$
FLANet [89]	2022	HRNet-W48	-	83.6 $\mathbb{T}$	46.99 $\mathbb{V}$
		ResNet-150	88.5 $\mathbb{T}$	-	-
SegNeXt [97]	2022	MSCAN-L	90.6 $\mathbb{T}$	-	-
ConvNeXt [42]	2022	ConvNeXt-XL	-	-	54.0 $\mathbb{V}$
PVT V2 [103]	2022	PVT V2-B5	-	-	48.7 $\mathbb{V}$
HRViT [104]	2022	HRViT-b3	-	83.16 $\mathbb{V}$	50.20 $\mathbb{V}$
P2T [105]	2022	P2T-Large	-	-	49.4 $\mathbb{V}$
FsaNet [22]	2023	ResNet-101	-	83.05 $\mathbb{T}$	44.10 $\mathbb{V}$
InternImage [94]	2023	InternImage-H	-	86.1 $\mathbb{T}$ 87.0 $\mathbb{V}$	62.9 $\mathbb{V}$
ONE-PEACE [38]	2023	-	-	-	63.0 $\mathbb{V}$
SERNet-Former [222]	2024	Efficient-ResNet	-	87.35 $\mathbb{V}$	-

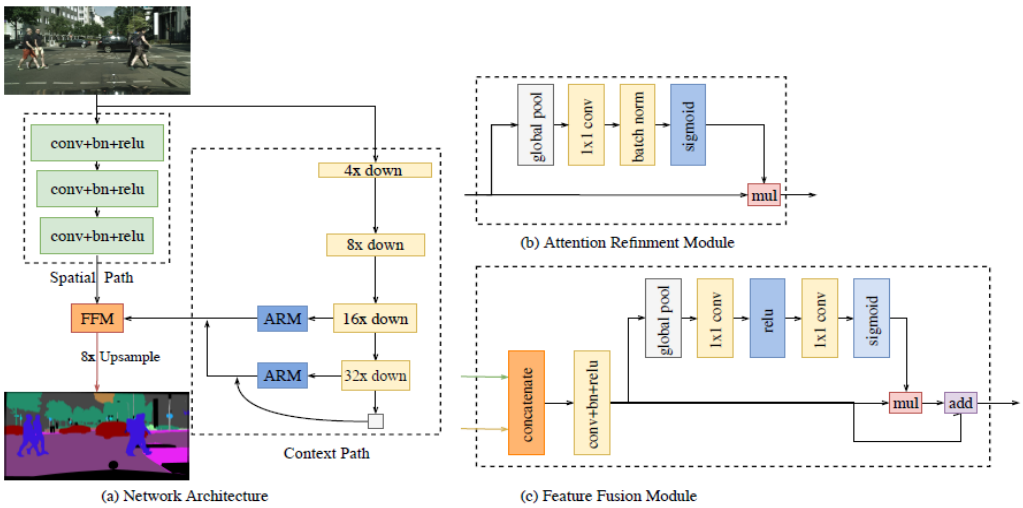

FIGURE 19. BiSeNet architecture. From [124].

used to. In this way, a better contextual information extraction is performed at multiple levels of feature hierarchy. Also, a lightweight channel attention module is employed in the decoder, at the beginning and after each feature fusion, in order to emphasize meaningful features. All these approaches added to the final architecture, containing less than 1M parameters, lead to an enhanced learning suitable for real-time requirements.

ALANet [216] proposed a new feature extractor block combining factorized convolutions, dilated convolutions, and channel-wise attention. In the decoder part, a new contextual information extractor and a lightweight attention mechanism are included. ANet [217] developed a new encoder block similar to the design of semantic segmentation contextual information extractors, e.g., ASPP [25]. Specifically, the input is passed through three dilated convolutions and one average pooling layer in parallel, then the resulted feature maps are concatenated and processed by a 3×3 grouped convolution and a 1×1 convolution. This block is integrated in each stage of the encoder. Also, they proposed a lightweight decoder that shows better performance than other decoder alternatives. The proposed decoder separately passes the last three stages of the encoder through a simple attention module, and further combines the feature maps via addition and concatenation.

B. MULTI-RESOLUTION BRANCHES

ICNET [119] exploited a multi-resolution architecture. Low-, medium-, and high-resolution images are fed into different CNNs. The low resolution one passes through a heavy architecture, namely PSPNet [29], while the medium- and high-resolution images pass through lightweight CNNs. Thus, the architecture is capable of running in real-time with decent segmentation accuracy. In GUN [120], which focuses on the decoding process, a novel guided upsampling module is suggested. This module demonstrated high performances and can be easily integrated into other architectures.

Depthwise convolutions, the pyramid pooling module [29], and network pruning are the key elements used in ContextNet [121] for run-time efficiency. SwiftNetRN-18 [122] argues that encoders designed for ImageNet classification and simplified decoders achieve a reasonable balance between speed and accuracy. SwiftNetRN-18 pyr [123] incorporates ResNet-18 [7] and MobileNetV2 [30] as encoder networks, and proposes an efficient pyramidal fusion mechanism.

C. TWO-PATHWAY ENCODER

Context path and spatial path are explored in this two-pathway encoder framework. The goal of this structure is to preserve spatial information and increase the receptive field. BiSeNet [124], an extensively revised architecture [125], [126], [127], [128], [129], [130], [131], [132], followed this pattern. As presented in Figure 19, three convolutional layers are inserted into the spatial path and the Xception [31] network is used in the context path. Also, the context path contains two attention refinement modules such that refined features are produced before fusing them with the spatial path features. The entire architecture improves both speed and accuracy.

From the carried out experiments using Fast-SCNN [133], the authors concluded that pre-training shallow networks on ImageNet does not gain a significant improved accuracy,

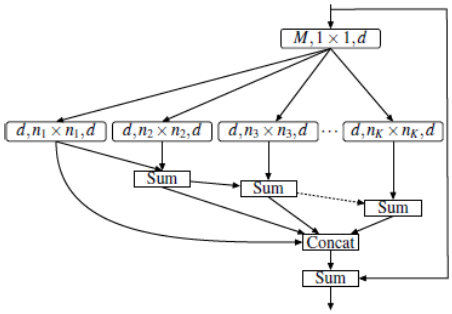

FIGURE 20. ESP module. From [153].

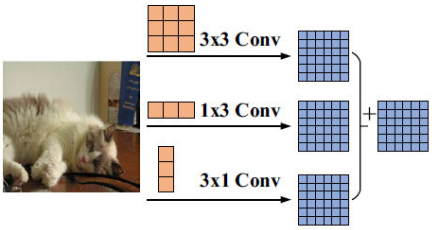

FIGURE 21. Asymmetric convolution block. From [157].

an opposite perspective to that of SwiftNetRN-18 [122], which encouraged the use of pre-trained models.

EACNet [134] is a bilateral architecture that comprises depthwise convolution, factorized convolution, and dilated convolution, obtaining a high accuracy without pre-training. DDRNet [135] represents a strong architecture that obtained superior accuracy and high inference speed for images of resolution 2048×1024. The proposed architecture is depicted in Figure 22. Bilateral fusions are employed in this framework for an improved accuracy. DAPPM is a complex module, but it does not affect the inference speed due to the small image resolution input. The purpose of this module is to enlarge the receptive field for a better contextual information extraction. It employs average pooling layers with different large kernels in parallel, upsamples the feature maps, and uses more 3×3 convolutions to fuse contextual information in a hierarchical-residual manner. Even though this module does not make use of dilated convolutions, it provides richer context.

BFMNet [136] addressed the small receptive field and the detailed information loss challenging issues. The major elements of the architecture are the bilateral structure, multi-scale context aggregation module to recognize multi-scale objects, and an attention feature fusion module for aggregation of the features from the two branches. MLFNet [137] also targeted to solve the same issues as [136], obtaining reasonable outcomes.

Fast-DSAGCN [212] designed a novel DSSGC lightweight encoder module and developed a new attention mechanism. Both modules incorporate dilated convolutions.

RDRNet [213] is a two-branch architecture that uses multi-path blocks during training and reparameterizes them into a single block during inference. The proposed basic block

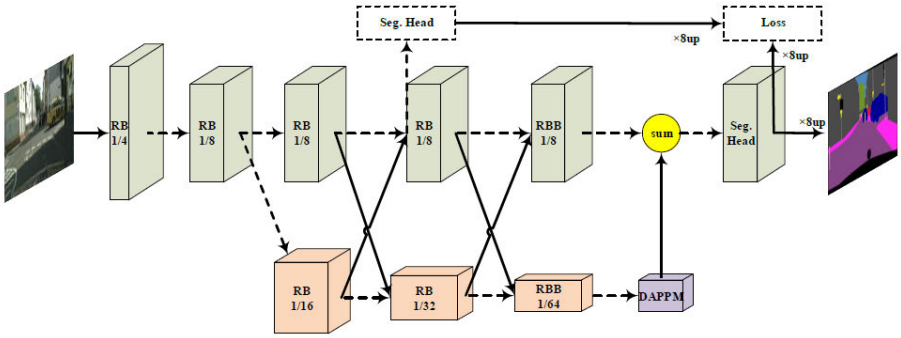

FIGURE 22. DDRNet architecture. From [135].

used in the encoder, named reparameterizable block (RB), has three paths during training: the first one applies a 3×3 convolution, the second one applies two 1×1 convolutions, and the third path is the residual connection. Compared with the widely adopted ResNet basic block, the path with the two 1×1 convolutions is additionally added in the RB block. During inference, the reparameterization to 3×3 convolution consists of merging the learnable parameters of the convolutional layers and batch normalization layers. This reparameterization does not affect the accuracy of the model. They also introduced a contextual information extractor, reparameterizable pyramid pooling module (RPPM), that learns richer feature representation without increasing inference time. The performed extensive experiments illustrate both high performance and fast inference, aiming for the real-time objectives. Hence, this inference reparameterization strategy should be further explored for different semantic segmentation models.

DSNet [214] proposed a new dual-branch model by revisiting the use of dilated convolutions. They derived three empirical guidelines that can help researchers and practitioners to develop other high-performance real-time models. These guidelines are: *(i)* use dilated convolutions together with dense convolutions; *(ii)* choosing dilation rates is influential for higher accuracy; *(iii)* adopting an effective fusion mechanism can boost the performance of the model. In the context branch module, the input is passed through three dilated convolutional layers, each having a different dilation rate. After passing through these convolutions, the intermediate feature maps are concatenated. The context branch uses small dilation rates including 2, 3, and 5. The spatial branch consists of ResNet's basic blocks and a multi-scale attention fusion module having the objective to allow the model to selectively fuse the information from different scales. Finally, in the proposed context extractor, they stack several 3×3 dilated convolutions, unlike the parallel structure of the majority of such models, e.g., the ASPP module.

D. ATTENTION-BASED MODELS

Over the years, real-time semantic segmentation algorithms based on attention mechanisms have gained popularity due to the highly accurate outcomes, the main target for this task. DFANet [138] added a fully-connected attention module at the end of the backbone to enhance accuracy. LEDNet [139] implemented the attention mechanism in the decoding stage to obtain larger receptive fields. Other networks that introduced lightweight attention modules in the decoder are CARNet [140], MFENet [141], LRDNet [142], [143]. These attention decoders are a good choice to improve low- and high-level feature maps fusion, and also to construct simple decoders suitable for high inference speed.

An architecture that extracts context features via an attention mechanism in all network phases is CGNet [144]. FANet [145] designed a fast attention module inspired from the self-attention mechanism in order to alleviate the small receptive fields and reduced spatial details semantic segmentation problems. Furthermore, DESANet [146], which employs two-pathway encoder and self-attention mechanism, obtained a good trade-off between accuracy and speed for high-resolution images.

Other attention-based architectures include: MGSeg [21], EFRNet [147], JPANet [148], RELAXNet [149], DCNet [150], FPN [151], PP-LiteSeg [198], SFRSeg [152], CSFCN [168], AttNAS [174], [187].

The best results regarding real-time semantic segmentation are achieved using PIDNet [32]. The raised issue addressed by this article is the reduced segmentation accuracy because of the direct fusion of high-resolution details and low-frequency context. The architecture, Figure 23, integrates three branches corresponding to detail, context, and boundary information, respectively. Basic ResNet blocks are used for the three branches. This model also employs the attention mechanism to guide the fusion of the network branches. The Pag attention module integrates the outputs of the P branch with the outputs of the I branch in order to learn the useful semantic features from the I branch. Context information is extracted via the proposed PAPPM module, a modified lightweight version of DAPPM, which reduces the number of channels for each scale. The Bag attention module incorporates the context information together with the outputs of the P and D branches to effectively guide the fusion of context and spatial representations. Auxiliary losses are employed for a better learning representation.

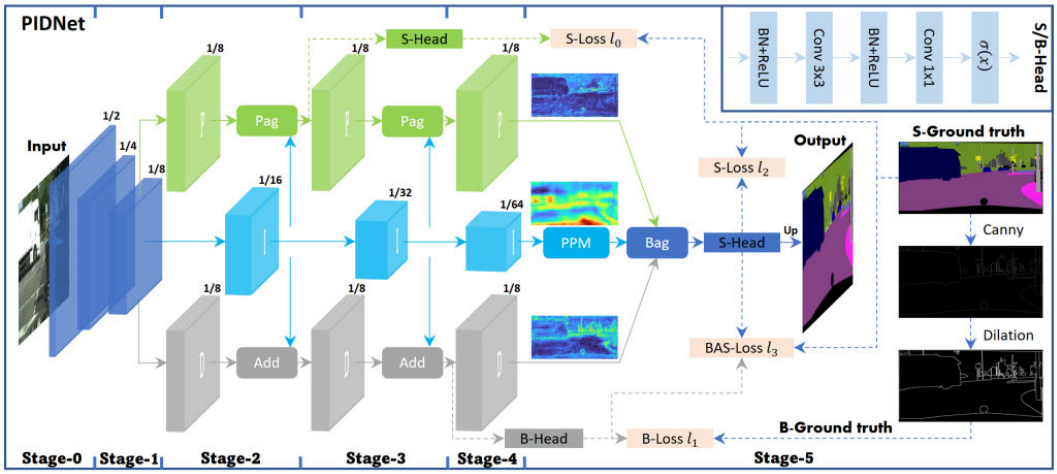

FIGURE 23. PIDNet architecture. From [32].

E. PYRAMID-BASED MODELS

Pyramid-based models are proposed in semantic segmentation literature in order to get high quality segmentation of multi-scale objects. The atrous spatial pyramid pooling (ASPP) module, proposed in [25], is highly efficient, but computationally expensive, an undesired characteristic for real-time systems. ESPNet [153] introduced an efficient spatial pyramid module (ESP), depicted in Figure 20. This module is based on the convolution factorization principle, it specifically divides a traditional convolution into a point-wise convolution (1×1 convolution) and a spatial pyramid of dilated convolutions. In this manner, the ESP module becomes very efficient regarding computation, power, and memory.

Inspired from Res2Net [33] module, the FPE block proposed by [154] performs efficient pyramid encoding in each encoder stage. The encoding process of FPE block is carried out by four parallel depthwise dilated convolutions.

Joint Pyramid Upsampling (JPU) module is proposed by FastFCN [155]. This module succeeded in reducing the computational complexity more than three times, without accuracy degradation. LDPNet [156] also introduced a lightweight pyramid block based on the split-transform-concatenate procedure for a better segmentation accuracy. An improved version of ASPP is presented in [157]. The proposed ASPP block merges asymmetric dilated convolution blocks with residual networks for an enhanced network representation. The structure of the asymmetric convolution block is illustrated in Figure 21.

F. TRANSFORMER-BASED MODELS

Due to the impressive performance of the Transformer model in the majority of artificial intelligence fields, it was a natural idea to introduce this model into the real-time semantic segmentation setting, also. Repurposing this model for this scenario is challenging, because the Transformer model is a heavy architecture with high computational complexity.

SegFormer [39] modified the original Transformer encoder with a lightweight one, and proposed a multilayer perceptron decoder. The resulting model led to high efficiency and accuracy, and, most notably, it is more robust to corruptions and perturbations than other models. A combination of CNNs and Transformer resulted in the TopFormer [158] architecture, depicted in Figure 24. The token pyramid module produces a token pyramid from the input image, which is then passed through a Vision Transformer to extract scale-aware semantics. These semantics are inserted into an injection module for an enhanced representation and, in the end, the segmentation head completes the segmentation task. The experimental results show the benefits of this method.

RTFormer [159] is a dual-resolution Transformer that was inspired by the successful architecture of DDRNet [135]. RTFormer shows its superiority not only for real-time segmentation, but also for general semantic segmentation datasets. SSformer [160] is a semantic segmentation model inspired by Swin Transformer [34], and achieved comparable results with state-of-the-art. In order to strengthen the global representation drawback of CNNs, LETNet [161] designed an efficient mixed architecture that comprises CNN and Transformer elements. Particularly, the model uses CNN structures for the encoder and decoder, and an efficient Transformer that is inserted between them. The CNN structures help to better extract the local features, a limitation of the Transformer model, while the Transformer has the advantage to model global context. To reduce model complexity, the Transformer employs a lightweight multi-head attention mechanism.

A lightweight Transformer backbone is presented in [162]. An efficient self-attention module is proposed instead of the multi-head self-attention one, and also a different convolution module replaces the feed-forward module of the traditional Transformer encoder. All these modifications

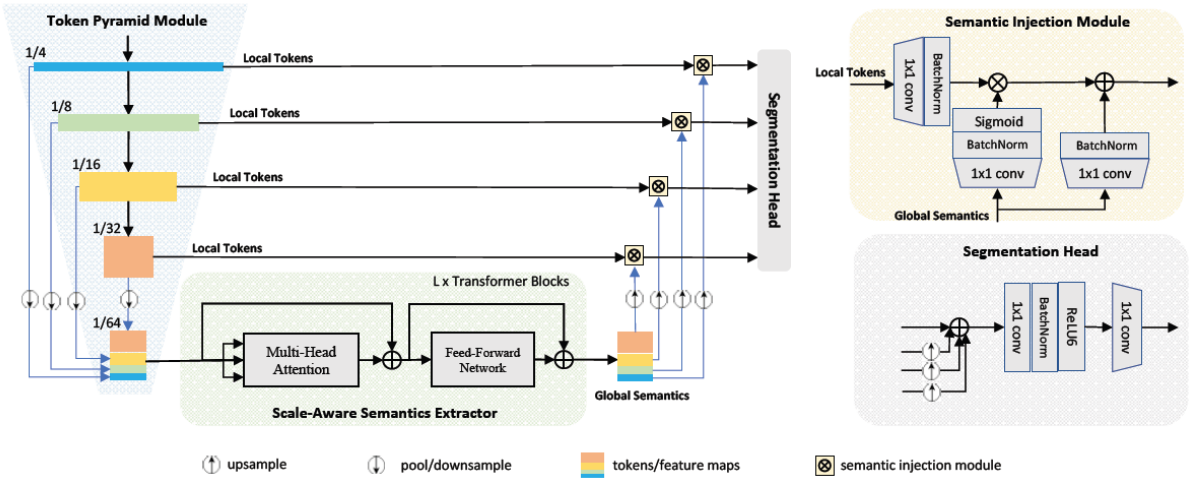

FIGURE 24. Token pyramid transformer. From [158].

led to competitive results for the semantic segmentation task. AFFormer [163] stated that most of the lightweight semantic segmentation advances concentrated on designing low-computational decoders, excluding the complexity introduced by the overall structure. The model uses two parallel Transformer-based networks and adaptive frequency filter for the encoding part, while the decoder consists of a single convolutional layer as classification layer. Thus, the semantic segmentation task is as simple as a classification task.

There are many challenges when designing deep learning architectures for the semantic segmentation task. The spatial information needed to accurately upsample the features to the original input resolution is discarded during the encoding process. Therefore, researchers try to find the best solutions for the decoding part. The developed techniques for real-time segmentation mostly include the use of lightweight attention-based fusion mechanisms, various lightweight context information extractors, and dilated, factorized, or depthwise convolutions. Although researchers were successful in achieving fast inference, the accuracy is not very high. On the other hand, the search for more accurate segmentation leads to complex architectures that are resource intensive and not adequate for real-time settings. Once the model has been trained, techniques like pruning and quantization can be used to increase the effectiveness of these complex architectures. The objective of the pruning method involves eliminating the model's redundant parameters and making it smaller and faster ([235], [236], [237]). This can be done in several ways, including layer pruning, channel pruning, weight pruning, etc. The quantization method reduces computational and memory costs by using low-precision data types, such as 8-bit integers (int8), rather than the standard 32-bit floating point (float32), to represent the weights and activations. Therefore, the final model may operate on embedded devices and uses less memory capacity.

Table 3 presents quantitative results of several methods that are concerned with high inference speed and an adequate accuracy. The results are given only for the widely adopted Cityscapes dataset.

V. FUTURE RESEARCH DIRECTIONS

Witnessing the evolution of semantic image segmentation using deep learning techniques, it is clear that there is still room for improvements. This section presents several research directions for progressing this task of interest.

A. REAL-TIME APPROACHES

We believe that semantic segmentation methods that target real-time processing are very important due to their multiple applications in autonomous driving, medical imaging analysis, augmented reality, to name a few. We have seen that a lot of progress has been made in this area, but there is still the need to design a model that deals with the two issues, accuracy and inference speed, simultaneously. One such model could be the Transformer that solves the accuracy issue, but designing it in a more lightweight fashion, such that the high accuracy is maintained, remains a serious challenge. ShiftVit [201] replaced the attention mechanism involved in the Transformer architecture with a very simple shift operation, i.e., it requires no parameters and no computation, only an exchange of channels is performed. They concluded that the attention mechanism may not be the key factor that raised the Transformer performance in the majority of tasks. Since the attention mechanism increases the computational complexity, this remark is extremely favorable for creating real-time Transformer models. Therefore, for designing such real-time models, we can investigate other factors and examine more Transformer variants.

B. WEAKLY-SUPERVISED LEARNING

Many efforts have been made to reduce the pixel-level labeling costs, such as the emergence of weakly-supervised methods. Concretely, this approach trains a model with weaker training annotations, including image-level labels

TABLE 3. Performance of real-time models on Cityscapes dataset. ('$\mathbb{T}/\mathbb{V}$' represents test/validation set; 'FPS' denotes frames per second; 'Params (M)' is the number of learnable parameters).

Method	Year	Backbone	GPU	Resolution	FPS	Params (M)	mIoU
ENet [113]	2016	-	Titan X	640 × 360 1280 × 720 1920 × 1080	135.4 46.8 21.6	0.37	58.3 $\mathbb{T}$
LinkNet [115]	2017	ResNet-18	Titan X	640 × 360 1280 × 720 1920 × 1080	65.8 18.7 8.5	11.5	76.4 $\mathbb{V}$
ERFNet [116]	2018	-	Titan X	640 × 360 1280 × 720 1920 × 1080	83.3 24.4 11.4	-	69.7 $\mathbb{T}$
ContextNet [125]	2018	-	Titan X	2048 × 1024	18.3	0.85	65.9 $\mathbb{V}$
BiSeNet [128]	2018	Xception-39 ResNet-18	Titan XP	2048 × 1024	105.8 65.5	5.8 49.0	68.4 $\mathbb{T}$ 74.7 $\mathbb{T}$
ShelfNet [118]	2019	ResNet-18	GTX 1080Ti	2048 × 1024	36.9	-	74.8 $\mathbb{T}$
SwiftNetRN-18 [126]	2019	ResNet-18	GTX 1080Ti	2048 × 1024	39.9	11.8	75.5 $\mathbb{T}$
LEDNet [143]	2019	ResNet	GTX 1080Ti	1024 × 512	71	0.94	70.6 $\mathbb{T}$
FDDWNet [120]	2020	-	RTX 2080Ti	1024 × 512	60	0.80	71.5 $\mathbb{T}$
LDPNet [160]	2020	-	GTX 1080Ti	1024 × 512	87	0.8	71.1 $\mathbb{T}$
CARNet [144]	2020	ResNet-152	Titan X	1024 × 512	29.4	63.3	75.2 $\mathbb{T}$
ERPNet [121]	2021	ResNet-18 MobileNet V3	GTX 2080	896 × 896 780 × 780	66.1 109.5	10.98 1.46	75.3 $\mathbb{T}$ 73.6 $\mathbb{T}$
DDRNet [139]	2021	ResNet	GTX 2080Ti	2048 × 1024	101.6	5.7	77.4 $\mathbb{T}$
BiSeNet V2 [129]	2021	-	GTX 1080Ti	2048 × 1024	156	-	72.6 $\mathbb{T}$
SegFormer [39]	2021	MiT-B5	-	1024 × 1024	2.5	84.7	84.0 $\mathbb{V}$
RTFormer [164]	2022	-	RTX 2080Ti	2048 × 1024	110	4.8	76.3 $\mathbb{V}$
RELAXNet [153]	2022	-	GTX 2080Ti	1024 × 512	64	1.9	74.8 $\mathbb{T}$
JPANet [152]	2022	-	GTX 1080Ti	1024 × 512	109.9	3.49	71.62 $\mathbb{T}$
PP-LiteSeg [203]	2022	STDC1 [131] STDC2 [131]	GTX 1080Ti	1024 × 512 1536 × 768	273.6 102.6	-	72.0 $\mathbb{T}$ 73.1 $\mathbb{V}$ 77.5 $\mathbb{T}$ 78.2 $\mathbb{V}$
BFMNet [140]	2023	ResNet-18	RTX 2080Ti	1536 × 768 2048 × 1024	63.7 31.4	22.3	77.7 $\mathbb{T}$ 78.9 $\mathbb{T}$
MLFNet [141]	2023	ResNet-18 ResNet-34	Titan XP	1024 × 512	95.1 72.2	9.90 13.03	71.0 $\mathbb{T}$ 72.1 $\mathbb{T}$
BiSeNet V3 [135]	2023	STDC2	GTX 1080Ti	1536 × 768	93.8	-	79.0 $\mathbb{T}$
LETNet [166]	2023	-	RTX 3090	1024 × 512	150	0.95	72.8 $\mathbb{T}$
AFFormer [168]	2023	-	V100 NVIDIA	2048 × 1024	22	3.0	78.7 $\mathbb{V}$
PIDNet [33]	2023	ResNet	RTX 3090	2048 × 1024	93.2 31.1	7.6 36.9	78.6 $\mathbb{T}$ 80.6 $\mathbb{T}$
DSNet [221]	2024	-	RTX 3090	2048 × 1024	37.6	6.8	80.4 $\mathbb{V}$

(i.e., object classes existent in the image) [41], [164], [184]; scribbles (i.e., a group of pixels per object class) [42], [165]; bounding boxes (i.e., object locations) [43], etc. The best model for this research direction is SemPLeS [44], 82.9% mIoU on the Pascal VOC 2012 test set. Updated surveys with the advances of weakly-supervised models are [50] and [51].

C. ZERO-, ONE-, AND FEW-SHOT LEARNING

These learning types are concerned with predicting new classes with insufficient labeled data. Some representative papers for each learning category are [19], [20], [45], [48], [49], [193], [194], [196]. In the first case, the learning process tries to classify pixels of never-seen object classes, i.e., zero object examples in the training dataset. One-shot learning's goal is to label image pixels given just one training example per object class. Following the same pattern, few-shot learning has few pixels annotated per object class. Given that this research direction tries to accurately segment images using limited training data, thus reducing the annotations' time-consuming and expensive process, it should be explored more in the future. Also, the methods are more tested on Pascal VOC and Pascal Context datasets, and less on urban street scenes datasets that aim to be used in autonomous driving. Some surveys on these topics are [46] and [47].

D. DOMAIN ADAPTATION

This machine learning technique transfers semantic segmentation models knowledge trained on a source domain (synthetic/simulated dataset) to a target domain (real dataset) that contains limited annotations. In this manner, the performance is enhanced, and also the labeling process costs are reduced by a large margin. There are various types of domain adaptation based on the real dataset labeling, including supervised, semi-supervised, weakly-supervised, and unsupervised. The latter type is the most captivating one in semantic segmentation [56], [57], [58], [59], due to the zero target labels. Some examples of simulated semantic segmentation datasets are GTA5 [52], Synscapes [53],

MUAD [54], SYNTHIA [55]. Surveys that treat domain adaptation include [60] and [61].

E. INCREMENTAL LEARNING

Instead of training deep learning models from scratch when new classes are added into existing datasets, incremental learning came up with the strategy of updating the model's weights by training only on the added data. The major problem concerning this procedure is known as catastrophic forgetting [195], i.e., the model learns the new added classes, but begins to forget the old learned ones. In order to reduce the expensive process of pixel-level annotations, different types of weak supervision can be investigated in this framework. Some works that encourage the use of the incremental learning technique are [62], [63], [64], [65], [66]. Overall, this research direction is very promising due to the fact that it gradually gathers knowledge, thus there is no need for retraining the model every time new classes are added into certain datasets.

F. STATE SPACE MODEL

State Space Model (SSM) is a mathematical model used for the analysis of dynamic systems' behavior. Recently, a transformative long sequence modeling architecture, Mamba [218], emerged in the field of natural language processing in order to solve the Transformers' computational inefficiency on long sequences. This architecture integrates these SSMs and enjoys improved performance and faster inference, at present being actively employed in multiple computer vision tasks. Regarding the semantic segmentation task, Vision Mamba is applied more in remote sensing image segmentation (e.g., [219], [220], [221], [222], [223]), and medical image segmentation (e.g., [224], [225], [226], [227], [228]). Being in its early stages, Vision Mamba models were not applied for image datasets related to autonomous driving. Therefore, a new possible research direction could be the implementation of these models for autonomous driving scenarios, given the fast inference that fits real-time segmentation requirements.

VI. CONCLUSION

In conclusion, this work intended to discuss deep learning methods for the semantic segmentation task by providing a dual viewpoint beneficial for both research and real-world applications. Transformer models are moving closer to excellence, but their heavy computational costs make them incompatible with real-time requirements. On the other side, although CNN-based models' performance is surpassed by the Transformer ones, their lightweight design conforms to the solution for practical use cases. Since state space models are good at modeling long-range dependencies similar to the Transformer and have high inference speed, researchers and practitioners may investigate integrating them into semantic segmentation architectures. Hence, how to provide an optimal balance regarding the trade-off between accuracy and inference speed still remains a future research direction.

REFERENCES

[1] J. Fu, J. Liu, H. Tian, Y. Li, Y. Bao, Z. Fang, and H. Lu, "Dual attention network for scene segmentation," in *Proc. IEEE/CVF Conf. Comput. Vis. Pattern Recognit.*, Jun. 2019, pp. 3146–3154.

[2] N. Otsu, "A threshold selection method from gray-level histograms," *IEEE Trans. Syst., Man, Cybern.*, vol. SMC-9, no. 1, pp. 62–66, Jan. 1979.

[3] R. Nock and F. Nielsen, "Statistical region merging," *IEEE Trans. Pattern Anal. Mach. Intell.*, vol. 26, no. 11, pp. 1452–1458, Nov. 2004.

[4] N. Dhanachandra, K. Manglem, and Y. J. Chanu, "Image segmentation using k-means clustering algorithm and subtractive clustering algorithm," *Proc. Comput. Sci.*, vol. 54, pp. 764–771, Jan. 2015.

[5] K. Simonyan, "Very deep convolutional networks for large-scale image recognition," in *Proc. Int. Conf. Learn. Represent.*, Jan. 2015, pp. 1–14.

[6] C. Szegedy, W. Liu, Y. Jia, P. Sermanet, S. Reed, D. Anguelov, D. Erhan, V. Vanhoucke, and A. Rabinovich, "Going deeper with convolutions," in *Proc. IEEE Conf. Comput. Vis. Pattern Recognit.*, Jun. 2015, pp. 1–9.

[7] K. He, X. Zhang, S. Ren, and J. Sun, "Deep residual learning for image recognition," in *Proc. IEEE Conf. Comput. Vis. Pattern Recognit.*, Jun. 2016, pp. 770–778.

[8] J. Long, E. Shelhamer, and T. Darrell, "Fully convolutional networks for semantic segmentation," in *Proc. IEEE Conf. Comput. Vis. Pattern Recognit.*, Jun. 2015, pp. 3431–3440.

[9] S. Shetty, "Application of convolutional neural network for image classification on PASCAL VOC challenge 2012 dataset," 2016, *arXiv:1607.03785*.

[10] R. Mottaghi, X. Chen, X. Liu, N.-G. Cho, S.-W. Lee, S. Fidler, R. Urtasun, and A. Yuille, "The role of context for object detection and semantic segmentation in the wild," in *Proc. IEEE Conf. Comput. Vis. Pattern Recognit.*, Jun. 2014, pp. 891–898.

[11] M. Cordts, M. Omran, S. Ramos, T. Rehfeld, M. Enzweiler, R. Benenson, U. Franke, S. Roth, and B. Schiele, "The cityscapes dataset for semantic urban scene understanding," in *Proc. IEEE Conf. Comput. Vis. Pattern Recognit. (CVPR)*, Jun. 2016, pp. 3213–3223.

[12] G. Brostow, J. Fauqueur, and R. Cipolla, "Semantic object classes in video: A high-definition ground truth database," *Pattern Recognit. Lett.*, vol. 30, no. 2, pp. 88–97, Apr. 2009.

[13] B. Zhou, H. Zhao, X. Puig, S. Fidler, A. Barriuso, and A. Torralba, "Scene parsing through ADE20K dataset," in *Proc. IEEE Conf. Comput. Vis. Pattern Recognit.*, Jul. 2017, pp. 633–641.

[14] A. Krizhevsky, I. Sutskever, and G. E. Hinton, "ImageNet classification with deep convolutional neural networks," in *Proc. Neural Inf. Process. Syst.*, 2012, pp. 1–9.

[15] W. Liu, A. Rabinovich, and A. C. Berg, "ParseNet: Looking wider to see better," in *Proc. Int. Conf. Learn. Represent.*, 2016, pp. 1–11.

[16] H. Noh, S. Hong, and B. Han, "Learning deconvolution network for semantic segmentation," in *Proc. IEEE Int. Conf. Comput. Vis. (ICCV)*, Dec. 2015, pp. 1520–1528.

[17] L. C. Chen, G. Papandreou, I. Kokkinos, K. Murphy, and A. L. Yuille, "Semantic image segmentation with deep convolutional nets and fully connected CRFs," in *Proc. Int. Conf. Learn. Represent.*, 2015, pp. 1–14.

[18] T. Pohlen, A. Hermans, M. Mathias, and B. Leibe, "Full-resolution residual networks for semantic segmentation in street scenes," in *Proc. IEEE Conf. Comput. Vis. Pattern Recognit. (CVPR)*, Jul. 2017, pp. 3309–3318.

[19] B. Liu, J. Jiao, and Q. Ye, "Harmonic feature activation for few-shot semantic segmentation," *IEEE Trans. Image Process.*, vol. 30, pp. 3142–3153, 2021.

[20] G. Gao, Z. Fang, C. Han, Y. Wei, C. H. Liu, and S. Yan, "DRNet: Double recalibration network for few-shot semantic segmentation," *IEEE Trans. Image Process.*, vol. 31, pp. 6733–6746, 2022.

[21] J.-Y. He, S.-H. Liang, X. Wu, B. Zhao, and L. Zhang, "MGSeg: Multiple granularity-based real-time semantic segmentation network," *IEEE Trans. Image Process.*, vol. 30, pp. 7200–7214, 2021.

[22] F. Zhang, A. Panahi, and G. Gao, "FsaNet: Frequency self-attention for semantic segmentation," *IEEE Trans. Image Process.*, vol. 32, pp. 4757–4772, 2023.

[23] H. Ding, X. Jiang, B. Shuai, A. Q. Liu, and G. Wang, "Semantic segmentation with context encoding and multi-path decoding," *IEEE Trans. Image Process.*, vol. 29, pp. 3520–3533, 2020.

[24] J. Wang, K. Sun, T. Cheng, B. Jiang, C. Deng, Y. Zhao, D. Liu, Y. Mu, M. Tan, X. Wang, W. Liu, and B. Xiao, "Deep high-resolution representation learning for visual recognition," *IEEE Trans. Pattern Anal. Mach. Intell.*, vol. 43, no. 10, pp. 3349–3364, Oct. 2021.

[25] L.-C. Chen, G. Papandreou, I. Kokkinos, K. Murphy, and A. L. Yuille, "DeepLab: Semantic image segmentation with deep convolutional nets, atrous convolution, and fully connected CRFs," *IEEE Trans. Pattern Anal. Mach. Intell.*, vol. 40, no. 4, pp. 834–848, Apr. 2018.

[26] X. Zhang, X. Zhou, M. Lin, and J. Sun, "ShuffleNet: An extremely efficient convolutional neural network for mobile devices," in *Proc. IEEE Conf. Comput. Vis. Pattern Recognit.*, Jun. 2018, pp. 6848–6856.

[27] D. Ha, A. Dai, and Q. V. Le, "HyperNetworks," in *Proc. Int. Conf. Learn. Represent.*, 2017, pp. 1–29.

[28] A. Howard, M. Sandler, B. Chen, W. Wang, L.-C. Chen, M. Tan, G. Chu, V. Vasudevan, Y. Zhu, R. Pang, H. Adam, and Q. Le, "Searching for MobileNetV3," in *Proc. IEEE/CVF Int. Conf. Comput. Vis. (ICCV)*, Oct. 2019, pp. 1314–1324.

[29] H. Zhao, J. Shi, X. Qi, X. Wang, and J. Jia, "Pyramid scene parsing network," in *Proc. IEEE Conf. Comput. Vis. Pattern Recognit. (CVPR)*, Jul. 2017, pp. 6230–6239.

[30] M. Sandler, A. Howard, M. Zhu, A. Zhmoginov, and L.-C. Chen, "MobileNetV2: Inverted residuals and linear bottlenecks," in *Proc. IEEE/CVF Conf. Comput. Vis. Pattern Recognit.*, Jun. 2018, pp. 4510–4520.

[31] F. Chollet, "Xception: Deep learning with depthwise separable convolutions," in *Proc. IEEE Conf. Comput. Vis. Pattern Recognit. (CVPR)*, Jul. 2017, pp. 1800–1807.

[32] J. Xu, Z. Xiong, and S. P. Bhattacharyya, "PIDNet: A real-time semantic segmentation network inspired by PID controllers," in *Proc. IEEE/CVF Conf. Comput. Vis. Pattern Recognit.*, Jun. 2023, pp. 19529–19539.

[33] S.-H. Gao, M.-M. Cheng, K. Zhao, X.-Y. Zhang, M.-H. Yang, and P. Torr, "Res2Net: A new multi-scale backbone architecture," *IEEE Trans. Pattern Anal. Mach. Intell.*, vol. 43, no. 2, pp. 652–662, Feb. 2021.

[34] Z. Liu, Y. Lin, Y. Cao, H. Hu, Y. Wei, Z. Zhang, S. Lin, and B. Guo, "Swin transformer: Hierarchical vision transformer using shifted windows," in *Proc. IEEE/CVF Int. Conf. Comput. Vis. (ICCV)*, Oct. 2021, pp. 9992–10002.

[35] G. Huang, Z. Liu, L. Van Der Maaten, and K. Q. Weinberger, "Densely connected convolutional networks," in *Proc. IEEE Conf. Comput. Vis. Pattern Recognit. (CVPR)*, Jul. 2017, pp. 2261–2269.

[36] H. Zhang, J. Xue, and K. Dana, "Deep TEN: Texture encoding network," in *Proc. IEEE Conf. Comput. Vis. Pattern Recognit. (CVPR)*, Jul. 2017, pp. 2896–2905.

[37] P. Wang, S. Wang, J. Lin, S. Bai, X. Zhou, J. Zhou, X. Wang, and C. Zhou, "ONE-PEACE: Exploring one general representation model toward unlimited modalities," 2023, *arXiv:2305.11172*.

[38] A. Dosovitskiy, L. Beyer, A. Kolesnikov, D. Weissenborn, X. Zhai, T. Unterthiner, M. Dehghani, M. Minderer, G. Heigold, S. Gelly, J. Uszkoreit, and N. Houlsby, "An image is worth 16×16 words: Transformers for image recognition at scale," *Proc. Int. Conf. Learn. Represent.*, 2021, pp. 1–22.

[39] E. Xie, W. Wang, Z. Yu, A. Anandkumar, J. M. Álvarez, and P. Luo, "SegFormer: Simple and efficient design for semantic segmentation with transformers," in *Proc. Neural Inf. Process. Syst.*, 2021, pp. 12077–12090.

[40] Z. Liu, H. Mao, C.-Y. Wu, C. Feichtenhofer, T. Darrell, and S. Xie, "A ConvNet for the 2020s," in *Proc. IEEE/CVF Conf. Comput. Vis. Pattern Recognit. (CVPR)*, Jun. 2022, pp. 11966–11976.

[41] P. O. Pinheiro and R. Collobert, "From image-level to pixel-level labeling with convolutional networks," in *Proc. IEEE Conf. Comput. Vis. Pattern Recognit. (CVPR)*, Jun. 2015, pp. 1713–1721.

[42] B. Sambaturu, A. Gupta, C. V. Jawahar, and C. Arora, "ScribbleNet: Efficient interactive annotation of urban city scenes for semantic segmentation," *Pattern Recognit.*, vol. 133, Jan. 2023, Art. no. 109011.

[43] J. Dai, K. He, and J. Sun, "BoxSup: Exploiting bounding boxes to supervise convolutional networks for semantic segmentation," in *Proc. IEEE Int. Conf. Comput. Vis. (ICCV)*, Dec. 2015, pp. 1635–1643.

[44] C.-S. Lin, C.-Y. Wang, Y.-C. F. Wang, and M.-H. Chen, "Semantic prompt learning for weakly-supervised semantic segmentation," 2024, *arXiv:2401.11791*.

[45] M. Bucher, T.-H. Vu, M. Cord, and P. Pérez, "Zero-shot semantic segmentation," in *Proc. Neural Inf. Process. Syst.*, 2019, pp. 1–15.

[46] N. Catalano and M. Matteucci, "Few shot semantic segmentation: A review of methodologies, benchmarks, and open challenges," 2023, *arXiv:2304.05832*.

[47] Z. Chang, Y. Lu, X. Ran, X. Gao, and X. Wang, "Few-shot semantic segmentation: A review on recent approaches," in *Proc. Neural Comput. Appl.*, Jul. 2023, pp. 18251–18275.

[48] A. Shaban, S. Bansal, Z. Liu, I. Essa, and B. Boots, "One-shot learning for semantic segmentation," in *Proc. Brit. Mach. Vis. Conf.*, 2017, pp. 1–17.

[49] N. Dong and E. P. Xing, "Few-shot semantic segmentation with prototype learning," in *Proc. Brit. Mach. Vis. Conf.*, Jan. 2018, p. 79.

[50] Y. Wang, F. Luo, H. Zhang, and Z. Huo, "Weakly supervised semantic segmentation based on image-level class labels with deep learning: A survey," in *Proc. 11th Int. Conf. Netw., Commun. Comput.*, Dec. 2022, pp. 45–55.

[51] K. Zhu, N. N. Xiong, and M. Lu, "A survey of weakly-supervised semantic segmentation," in *Proc. BigDataSecurity/HPSC/IDS*, 2023, pp. 10–15.

[52] S. R. Richter, V. Vineet, S. Roth, and V. Koltun, "Playing for data: Ground truth from computer games," in *Proc. Eur. Conf. Comput. Vis.*, Jan. 2016, pp. 102–118.

[53] M. Wrenninge and J. Unger, "Synscapes: A photorealistic synthetic dataset for street scene parsing," 2018, *arXiv:1810.08705*.

[54] G. Franchi, X. Yu, A. Bursuc, R. Kazmierczak, S. Dubuisson, E. Aldea, and D. Filliat, "MUAD: Multiple uncertainties for autonomous driving, a benchmark for multiple uncertainty types and tasks," in *Proc. Brit. Mach. Vis. Conf.*, 2022, pp. 1–20.

[55] G. Ros, L. Sellart, J. Materzynska, D. Vazquez, and A. M. Lopez, "The SYNTHIA dataset: A large collection of synthetic images for semantic segmentation of urban scenes," in *Proc. IEEE Conf. Comput. Vis. Pattern Recognit. (CVPR)*, Jun. 2016, pp. 3234–3243.

[56] Q. Zhang, J. Zhang, W. Liu, and D. Tao, "Category anchor-guided unsupervised domain adaptation for semantic segmentation," in *Proc. Neural Inf. Process. Syst.*, 2019, pp. 1–11.

[57] Z. Wang, M. Yu, Y. Wei, R. Feris, J. Xiong, W.-M. Hwu, T. S. Huang, and H. Shi, "Differential treatment for stuff and things: A simple unsupervised domain adaptation method for semantic segmentation," in *Proc. IEEE/CVF Conf. Comput. Vis. Pattern Recognit. (CVPR)*, Jun. 2020, pp. 12632–12641.

[58] S. Lee, J. Hyun, H. Seong, and E. Kim, "Unsupervised domain adaptation for semantic segmentation by content transfer," in *Proc. AAAI Conf. Artif. Intell.*, May 2021, pp. 8306–8315.

[59] S. Hu, F. Bonardi, S. Bouchafa, and D. Sidibé, "Multi-modal unsupervised domain adaptation for semantic image segmentation," *Pattern Recognit.*, vol. 137, May 2023, Art. no. 109299.

[60] G. Csurka, R. Volpi, and B. Chidlovskii, "Unsupervised domain adaptation for semantic image segmentation: A comprehensive survey," 2021, *arXiv:2112.03241*.

[61] M. Schwonberg, J. Niemeijer, J.-A. Termöhlen, J. P. Schäfer, N. M. Schmidt, H. Gottschalk, and T. Fingscheidt, "Survey on unsupervised domain adaptation for semantic segmentation for visual perception in automated driving," *IEEE Access*, vol. 11, pp. 54296–54336, 2023.

[62] U. Michieli and P. Zanuttigh, "Incremental learning techniques for semantic segmentation," in *Proc. IEEE/CVF Int. Conf. Comput. Vis. Workshop (ICCVW)*, Oct. 2019, pp. 3205–3212.

[63] F. Cermelli, M. Mancini, S. R. Bulò, E. Ricci, and B. Caputo, "Modeling the background for incremental learning in semantic segmentation," in *Proc. IEEE/CVF Conf. Comput. Vis. Pattern Recognit. (CVPR)*, Jun. 2020, pp. 9230–9239.

[64] F. Cermelli, D. Fontanel, A. Tavera, M. Ciccone, and B. Caputo, "Incremental learning in semantic segmentation from image labels," in *Proc. IEEE/CVF Conf. Comput. Vis. Pattern Recognit. (CVPR)*, Jun. 2022, pp. 4361–4371.

[65] P. Garg, R. Saluja, V. N. Balasubramanian, C. Arora, A. Subramanian, and C. V. Jawahar, "Multi-domain incremental learning for semantic segmentation," in *Proc. IEEE/CVF Winter Conf. Appl. Comput. Vis. (WACV)*, Jan. 2022, pp. 2080–2090.

[66] C. Yu, Q. Zhou, J. Li, J. Yuan, Z. Wang, and F. Wang, "Foundation model drives weakly incremental learning for semantic segmentation," in *Proc. IEEE/CVF Conf. Comput. Vis. Pattern Recognit. (CVPR)*, Jun. 2023, pp. 23685–23694.

[67] S. Minaee, Y. Boykov, F. Porikli, A. Plaza, N. Kehtarnavaz, and D. Terzopoulos, "Image segmentation using deep learning: A survey," *IEEE Trans. Pattern Anal. Mach. Intell.*, vol. 44, no. 7, pp. 3523–3542, Jul. 2022.

[68] I. Ulku and E. Akagündüz, "A survey on deep learning-based architectures for semantic segmentation on 2D images," *Appl. Artif. Intell.*, vol. 36, no. 1, Dec. 2022, Art. no. 2032924.

[69] A. Sohail, N. A. Nawaz, A. A. Shah, S. Rasheed, S. Ilyas, and M. K. Ehsan, "A systematic literature review on machine learning and deep learning methods for semantic segmentation," *IEEE Access*, vol. 10, pp. 134557–134570, 2022.

[70] U. Sehar and M. L. Naseem, "How deep learning is empowering semantic segmentation," *Multimedia Tools Appl.*, vol. 81, no. 21, pp. 30519–30544, Sep. 2022.

[71] A. Kaseb, M. Khaled, and O. Galal, "Convolutional neural networks for semantic segmentation: A recent survey," in *Proc. Int. Arab Conf. Inf. Technol. (ACIT)*, Nov. 2022, pp. 1–7.

[72] Y. Guo, G. Nie, W. Gao, and M. Liao, "2D semantic segmentation: Recent developments and future directions," *Future Internet*, vol. 15, no. 6, p. 205, Jun. 2023.

[73] Y. Mo, Y. Wu, X. Yang, F. Liu, and Y. Liao, "Review the state-of-the-art technologies of semantic segmentation based on deep learning," *Neurocomputing*, vol. 493, pp. 626–646, Jul. 2022.

[74] K. Muhammad, T. Hussain, H. Ullah, J. D. Ser, M. Rezaei, N. Kumar, M. Hijji, P. Bellavista, and V. H. C. de Albuquerque, "Vision-based semantic segmentation in scene understanding for autonomous driving: Recent achievements, challenges, and outlooks," *IEEE Trans. Intell. Transp. Syst.*, vol. 23, no. 12, pp. 22694–22715, Dec. 2022.

[75] C. J. Holder and M. Shafique, "On efficient real-time semantic segmentation: A survey," 2022, *arXiv:2206.08605*.

[76] I. Papadeas, L. Tsochatzidis, A. Amanatiadis, and I. Pratikakis, "Real-time semantic image segmentation with deep learning for autonomous driving: A survey," *Appl. Sci.*, vol. 11, no. 19, p. 8802, Sep. 2021.

[77] G. Takos, "A survey on deep learning methods for semantic image segmentation in real-time," 2020, *arXiv:2009.12942*.

[78] Y. Zhou, Y. Ren, E. Xu, S. Liu, and L. Zhou, "Supervised semantic segmentation based on deep learning: A survey," *Multimedia Tools Appl.*, vol. 81, no. 20, pp. 29283–29304, Aug. 2022.

[79] H. Thisanke, C. Deshan, K. Chamith, S. Seneviratne, R. Vidanaarachchi, and D. Herath, "Semantic segmentation using vision transformers: A survey," 2023, *arXiv:2305.03273*.

[80] L.-C. Chen, G. Papandreou, F. Schroff, and H. Adam, "Rethinking atrous convolution for semantic image segmentation," 2017, *arXiv:1706.05587*.

[81] L.-C. Chen, Y. Zhu, G. Papandreou, F. Schroff, and H. Adam, "Encoder–decoder with atrous separable convolution for semantic image segmentation," in *Proc. Eur. Conf. Comput. Vis.*, 2018, pp. 833–851.

[82] L. C. Chen, Y. Yang, J. Wang, W. Xu, and A. L. Yuille, "Attention to scale: Scale-aware semantic image segmentation," in *Proc. IEEE Conf. Comput. Vis. Pattern Recognit.*, Jun. 2016, pp. 3640–3649.

[83] Z. Huang, X. Wang, Y. Wei, L. Huang, H. Shi, W. Liu, and T. S. Huang, "CCNet: Criss-cross attention for semantic segmentation," *IEEE Trans. Pattern Anal. Mach. Intell.*, vol. 45, no. 6, pp. 6896–6908, Jun. 2023.

[84] Z. Zhong, Z. Q. Lin, R. Bidart, X. Hu, I. B. Daya, Z. Li, W.-S. Zheng, J. Li, and A. Wong, "Squeeze-and-attention networks for semantic segmentation," in *Proc. IEEE/CVF Conf. Comput. Vis. Pattern Recognit. (CVPR)*, Jun. 2020, pp. 13062–13071.

[85] Q. Song, J. Li, C. Li, H. Guo, and R. Huang, "Fully attentional network for semantic segmentation," in *Proc. AAAI Conf. Artif. Intell.*, Jun. 2022, pp. 2280–2288.

[86] G. Lin, A. Milan, C. Shen, and I. Reid, "RefineNet: Multi-path refinement networks for high-resolution semantic segmentation," in *Proc. IEEE Conf. Comput. Vis. Pattern Recognit.*, Jul. 2017, pp. 5168–5177.

[87] C. Peng, X. Zhang, G. Yu, G. Luo, and J. Sun, "Large kernel matters—Improve semantic segmentation by global convolutional network," in *Proc. IEEE Conf. Comput. Vis. Pattern Recognit. (CVPR)*, Jul. 2017, pp. 4353–4361.

[88] H. Zhang, K. Dana, J. Shi, Z. Zhang, X. Wang, A. Tyagi, and A. Agrawal, "Context encoding for semantic segmentation," in *Proc. IEEE/CVF Conf. Comput. Vis. Pattern Recognit.*, Jun. 2018, pp. 7151–7160.

[89] J. Dai, H. Qi, Y. Xiong, Y. Li, G. Zhang, H. Hu, and Y. Wei, "Deformable convolutional networks," in *Proc. IEEE Int. Conf. Comput. Vis. (ICCV)*, Oct. 2017, pp. 764–773.

[90] W. Wang, J. Dai, Z. Chen, Z. Huang, Z. Li, X. Zhu, X. Hu, T. Lü, L. Lu, H. Li, X. Wang, and Y. Qiao, "InternImage: Exploring large-scale vision foundation models with deformable convolutions," in *Proc. IEEE/CVF Conf. Comput. Vis. Pattern Recognit.*, Jun. 2023, pp. 14408–14419.

[91] S. Jégou, M. Drozdzal, D. Vazquez, A. Romero, and Y. Bengio, "The one hundred layers tiramisu: Fully convolutional DenseNets for semantic segmentation," in *Proc. IEEE Conf. Comput. Vis. Pattern Recognit. Workshops (CVPRW)*, Jul. 2017, pp. 1175–1183.

[92] M. Yang, K. Yu, C. Zhang, Z. Li, and K. Yang, "DenseASPP for semantic segmentation in street scenes," in *Proc. IEEE/CVF Conf. Comput. Vis. Pattern Recognit.*, Jun. 2018, pp. 3684–3692.

[93] M.-H. Guo, C.-Z. Lu, Q. Hou, Z. Liu, M. Cheng, and S. Hu, "SegNeXt: Rethinking convolutional attention design for semantic segmentation," in *Proc. Neural Inf. Process. Syst.*, 2022, pp. 1–15.

[94] S. Zheng, J. Lu, H. Zhao, X. Zhu, Z. Luo, Y. Wang, Y. Fu, J. Feng, T. Xiang, P. H. S. Torr, and L. Zhang, "Rethinking semantic segmentation from a sequence-to-sequence perspective with transformers," in *Proc. IEEE/CVF Conf. Comput. Vis. Pattern Recognit. (CVPR)*, Jun. 2021, pp. 6877–6886.

[95] Y. Jin, D. Han, and H. Ko, "TrSeg: Transformer for semantic segmentation," *Pattern Recognit. Lett.*, vol. 148, pp. 29–35, Aug. 2021.

[96] R. Strudel, R. Garcia, I. Laptev, and C. Schmid, "Segmenter: Transformer for semantic segmentation," in *Proc. IEEE/CVF Int. Conf. Comput. Vis. (ICCV)*, Oct. 2021, pp. 7242–7252.

[97] F. Zhu, Y. Zhu, L. Zhang, C. Wu, Y. Fu, and M. Li, "A unified efficient pyramid transformer for semantic segmentation," in *Proc. IEEE/CVF Int. Conf. Comput. Vis. Workshops (ICCVW)*, Oct. 2021, pp. 2667–2677.

[98] W. Wang, E. Xie, X. Li, D.-P. Fan, K. Song, D. Liang, T. Lu, P. Luo, and L. Shao, "Pyramid vision transformer: A versatile backbone for dense prediction without convolutions," in *Proc. IEEE/CVF Int. Conf. Comput. Vis. (ICCV)*, Oct. 2021, pp. 548–558.

[99] W. Wang, E. Xie, X. Li, D.-P. Fan, K. Song, D. Liang, T. Lu, P. Luo, and L. Shao, "PVT v2: Improved baselines with pyramid vision transformer," *Comput. Vis. Media*, vol. 8, no. 3, pp. 415–424, Sep. 2022.

[100] J. Gu, H. Kwon, D. Wang, W. Ye, M. Li, Y. Chen, L. Lai, V. Chandra, and D. Z. Pan, "Multi-scale high-resolution vision transformer for semantic segmentation," in *Proc. IEEE/CVF Conf. Comput. Vis. Pattern Recognit.*, Jun. 2022, pp. 12094–12103.

[101] Y.-H. Wu, Y. Liu, X. Zhan, and M.-M. Cheng, "P2T: Pyramid pooling transformer for scene understanding," *IEEE Trans. Pattern Anal. Mach. Intell.*, vol. 45, no. 11, pp. 12760–12771, Nov. 2023.

[102] H. Yan, C. Zhang, and M. Wu, "Lawin transformer: Improving semantic segmentation transformer with multi-scale representations via large window attention," 2022, *arXiv:2201.01615*.

[103] R. Ranftl, A. Bochkovskiy, and V. Koltun, "Vision transformers for dense prediction," in *Proc. IEEE/CVF Int. Conf. Comput. Vis. (ICCV)*, Oct. 2021, pp. 12159–12168.

[104] S. Zuo, Y. Xiao, X. Chang, and X. Wang, "Vision transformers for dense prediction: A survey," *Knowl.-Based Syst.*, vol. 253, Oct. 2022, Art. no. 109552.

[105] S. Wu, T. Wu, F. Lin, S. Tian, and G. Guo, "Fully transformer networks for semantic image segmentation," 2021, *arXiv:2106.04108*.

[106] B. Shi, D. Jiang, X. Zhang, H. Li, W. Dai, J. Zou, H. Xiong, and Q. Tian, "A transformer-based decoder for semantic segmentation with multi-level context mining," in *Proc. Eur. Conf. Comput. Vis.*, Jan. 2022, pp. 624–639.

[107] B. Zhang, Z. Tian, Q. Tang, X. Chu, X. Wei, C. Shen, and Y. Liu, "SegViT: Semantic segmentation with plain vision transformers," in *Proc. Neural Inf. Process. Syst.*, 2022, pp. 1–13.

[108] Z. Qin, J. Liu, X. Zhang, M. Tian, A. Zhou, S. Yi, and H. Li, "Pyramid fusion transformer for semantic segmentation," 2022, *arXiv:2201.04019*.

[109] A. Paszke, A. Chaurasia, S. Kim, and E. Culurciello, "ENet: A deep neural network architecture for real-time semantic segmentation," 2016, *arXiv:1606.02147*.

[110] V. Badrinarayanan, A. Kendall, and R. Cipolla, "SegNet: A deep convolutional encoder–decoder architecture for image segmentation," *IEEE Trans. Pattern Anal. Mach. Intell.*, vol. 39, no. 12, pp. 2481–2495, Dec. 2017.

[111] A. Chaurasia and E. Culurciello, "LinkNet: Exploiting encoder representations for efficient semantic segmentation," in *Proc. IEEE Vis. Commun. Image Process.*, Dec. 2017, pp. 1–4.

[112] E. Romera, J. M. Álvarez, L. M. Bergasa, and R. Arroyo, "ERFNet: Efficient residual factorized ConvNet for real-time semantic segmentation," *IEEE Trans. Intell. Transp. Syst.*, vol. 19, no. 1, pp. 263–272, Jan. 2018.

[113] M. Gamal, M. Siam, and M. Abdel-Razek, "ShuffleSeg: Real-time semantic segmentation network," 2018, *arXiv:1803.03816*.

[114] J. Zhuang, J. Yang, L. Gu, and N. Dvornek, "ShelfNet for fast semantic segmentation," in *Proc. IEEE/CVF Int. Conf. Comput. Vis. Workshop (ICCVW)*, Oct. 2019, pp. 847–856.

[115] Y. Nirkin, L. Wolf, and T. Hassner, "HyperSeg: Patch-wise hypernetwork for real-time semantic segmentation," in *Proc. IEEE/CVF Conf. Comput. Vis. Pattern Recognit. (CVPR)*, Jun. 2021, pp. 4060–4069.

[116] J. Liu, Q. Zhou, Y. Qiang, B. Kang, X. Wu, and B. Zheng, "FDDWNet: A lightweight convolutional neural network for real-time semantic segmentation," in *Proc. IEEE Int. Conf. Acoust., Speech Signal Process. (ICASSP)*, May 2020, pp. 2373–2377.

[117] J. Zhao, F. Zou, R. Li, Y. Li, and K. Li, "Efficient resolution-preserving network for real-time semantic segmentation," in *Proc. Int. Joint Conf. Neural Netw. (IJCNN)*, Jul. 2021, pp. 1–8.

[118] D. Mehta, A. Skliar, H. Ben Yahia, S. Borse, F. Porikli, A. Habibian, and T. Blankevoort, "Simple and efficient architectures for semantic segmentation," in *Proc. IEEE/CVF Conf. Comput. Vis. Pattern Recognit. Workshops (CVPRW)*, Jun. 2022, pp. 2627–2635.

[119] H. Zhao, X. Qi, X. Shen, J. Shi, and J. Jia, "ICNet for real-time semantic segmentation on high-resolution images," in *Proc. Eur. Conf. Comput. Vis.*, Jan. 2018, pp. 418–434.

[120] D. Mazzini, "Guided upsampling network for real-time semantic segmentation," in *Proc. Brit. Mach. Vis. Conf.*, Jan. 2018, pp. 1–12.

[121] R. P. K. Poudel, U. Bonde, S. Liwicki, and C. Zach, "ContextNet: Exploring context and detail for semantic segmentation in real-time," in *Proc. Brit. Mach. Vis. Conf.*, 2018, pp. 1–12.

[122] M. Oršic, I. Krešo, P. Bevandic, and S. Segvic, "In defense of pre-trained ImageNet architectures for real-time semantic segmentation of road-driving images," in *Proc. IEEE/CVF Conf. Comput. Vis. Pattern Recognit. (CVPR)*, Jun. 2019, pp. 12599–12608.

[123] M. Oršić and S. Segvić, "Efficient semantic segmentation with pyramidal fusion," *Pattern Recognit.*, vol. 110, Feb. 2021, Art. no. 107611.

[124] C. Yu, J. Wang, C. Peng, C. Gao, and G. Yu, "BiSeNet: Bilateral segmentation network for real-time semantic segmentation," in *Proc. Eur. Conf. Comput. Vis.*, 2018, pp. 1–17.

[125] C. Yu, C. Gao, J. Wang, G. Yu, C. Shen, and N. Sang, "BiSeNet v2: Bilateral network with guided aggregation for real-time semantic segmentation," *Int. J. Comput. Vis.*, vol. 129, no. 11, pp. 3051–3068, Nov. 2021.

[126] T.-W. Chen, Y.-T. Huang, and W.-H. Liao, "Far-sighted BiSeNet V2 for real-time semantic segmentation," in *Proc. 17th IEEE Int. Conf. Adv. Video Signal Based Surveill. (AVSS)*, Nov. 2021, pp. 1–8.

[127] M. Fan, S. Lai, J. Huang, X. Wei, Z. Chai, J. Luo, and X. Wei, "Rethinking BiSeNet for real-time semantic segmentation," in *Proc. IEEE/CVF Conf. Comput. Vis. Pattern Recognit. (CVPR)*, Jun. 2021, pp. 9711–9720.

[128] Q. Xu, Y. Ma, J. Wu, and C. Long, "Faster BiSeNet: A faster bilateral segmentation network for real-time semantic segmentation," in *Proc. Int. Joint Conf. Neural Netw. (IJCNN)*, Jul. 2021, pp. 1–8.

[129] L. Teng and Y. Qiao, "BiSeNet-oriented context attention model for image semantic segmentation," *Comput. Sci. Inf. Syst.*, vol. 19, no. 3, pp. 1409–1426, 2022.

[130] S. Zhao, X. Wu, and K. Tian, "Real-time semantic segmentation network based on improved BiSeNet V1," in *Proc. 11th Int. Conf. Netw., Commun. Comput.*, Dec. 2022, pp. 38–44.

[131] T.-H. Tsai and Y.-W. Tseng, "BiSeNet v3: Bilateral segmentation network with coordinate attention for real-time semantic segmentation," *Neurocomputing*, vol. 532, pp. 33–42, May 2023.

[132] J. Xu, X. Liu, L. Xu, C. Shi, X. Zhao, and Y. Wu, "BRNet: A bilateral residual network for real-time semantic segmentation," in *Proc. 6th Int. Conf. Artif. Intell. Big Data (ICAIBD)*, May 2023, pp. 849–854.

[133] R. P. K. Poudel, S. Liwicki, and R. Cipolla, "Fast-SCNN: Fast semantic segmentation network," in *Proc. Brit. Mach. Vis. Conf.*, 2019, pp. 1–9.

[134] Y. Li, X. Li, C. Xiao, H. Li, and W. Zhang, "EACNet: Enhanced asymmetric convolution for real-time semantic segmentation," *IEEE Signal Process. Lett.*, vol. 28, pp. 234–238, 2021.

[135] Y. Hong, H. Pan, W. Sun, and Y. Jia, "Deep dual-resolution networks for real-time and accurate semantic segmentation of road scenes," 2021, *arXiv:2101.06085*.

[136] J. Liu, F. Zhang, Z. Zhou, and J. Wang, "BFMNet: Bilateral feature fusion network with multi-scale context aggregation for real-time semantic segmentation," *Neurocomputing*, vol. 521, pp. 27–40, Feb. 2023.

[137] J. Fan, F. Wang, H. Chu, X. Hu, Y. Cheng, and B. Gao, "MLFNet: Multi-level fusion network for real-time semantic segmentation of autonomous driving," *IEEE Trans. Intell. Vehicles*, vol. 8, no. 1, pp. 756–767, Jan. 2023.

[138] H. Li, P. Xiong, H. Fan, and J. Sun, "DFANet: Deep feature aggregation for real-time semantic segmentation," in *Proc. IEEE/CVF Conf. Comput. Vis. Pattern Recognit.*, Jun. 2019, pp. 9522–9531.

[139] Y. Wang, Q. Zhou, J. Liu, J. Xiong, G. Gao, X. Wu, and L. J. Latecki, "Lednet: A lightweight encoder–decoder network for real-time semantic segmentation," in *Proc. IEEE Int. Conf. Image Process. (ICIP)*, Sep. 2019, pp. 1860–1864.

[140] S. Hao, Y. Zhou, Y. Zhang, and Y. Guo, "Contextual attention refinement network for real-time semantic segmentation," *IEEE Access*, vol. 8, pp. 55230–55240, 2020.

[141] B. Zhang, W. Li, Y. Hui, J. Liu, and Y. Guan, "MFENet: Muti-level feature enhancement network for real-time semantic segmentation," *Neurocomputing*, vol. 393, pp. 54–65, Jun. 2020.

[142] M. Zhuang, X. Zhong, D. Gu, L. Feng, X. Zhong, and H. Hu, "LRD-Net: A lightweight and efficient network with refined dual attention decorder for real-time semantic segmentation," *Neurocomputing*, vol. 459, pp. 349–360, Oct. 2021.

[143] C. Peng, T. Tian, C. Chen, X. Guo, and J. Ma, "Bilateral attention decoder: A lightweight decoder for real-time semantic segmentation," *Neural Netw.*, vol. 137, pp. 188–199, May 2021.

[144] T. Wu, S. Tang, R. Zhang, J. Cao, and Y. Zhang, "CGNet: A light-weight context guided network for semantic segmentation," *IEEE Trans. Image Process.*, vol. 30, pp. 1169–1179, 2021.

[145] P. Hu, F. Perazzi, F. C. Heilbron, O. Wang, Z. Lin, K. Saenko, and S. Sclaroff, "Real-time semantic segmentation with fast attention," *IEEE Robot. Autom. Lett.*, vol. 6, no. 1, pp. 263–270, Jan. 2021.

[146] Y.-B. Chang, C. Tsai, C.-H. Lin, and P. Chen, "Real-time semantic segmentation with dual encoder and self-attention mechanism for autonomous driving," *Sensors*, vol. 21, no. 23, p. 8072, Dec. 2021.

[147] K. Zhang, Q. Liao, J. Zhang, S. Liu, H. Ma, and J.-H. Xue, "EFRNet: A lightweight network with efficient feature fusion and refinement for real-time semantic segmentation," in *Proc. IEEE Int. Conf. Multimedia Expo (ICME)*, Jul. 2021, pp. 1–6.

[148] X. Hu, L. Jing, and U. Sehar, "Joint pyramid attention network for real-time semantic segmentation of urban scenes," *Int. J. Speech Technol.*, vol. 52, no. 1, pp. 580–594, Jan. 2022.

[149] J. Liu, X. Xu, Y. Shi, C. Deng, and M. Shi, "RELAXNet: Residual efficient learning and attention expected fusion network for real-time semantic segmentation," *Neurocomputing*, vol. 474, pp. 115–127, Feb. 2022.

[150] H. Yin, W. Xie, J. Zhang, Y. Zhang, W. Zhu, J. Gao, Y. Shao, and Y. Li, "Dual context network for real-time semantic segmentation," *Mach. Vis. Appl.*, vol. 34, no. 2, p. 22, Mar. 2023.

[151] T. V. Quyen and M. Y. Kim, "Feature pyramid network with multi-scale prediction fusion for real-time semantic segmentation," *Neurocomputing*, vol. 519, pp. 104–113, Jan. 2023.

[152] T. Singha, D.-S. Pham, and A. Krishna, "A real-time semantic segmentation model using iteratively shared features in multiple sub-encoders," *Pattern Recognit.*, vol. 140, Aug. 2023, Art. no. 109557.

[153] S. Mehta, M. Rastegari, A. Caspi, L. G. Shapiro, and H. Hajishirzi, "ESPNet: Efficient spatial pyramid of dilated convolutions for semantic segmentation," in *Proc. Eur. Conf. Comput. Vis.*, Jan. 2018, pp. 561–580.

[154] M. Liu and H. Yin, "Feature pyramid encoding network for real-time semantic segmentation," in *Proc. Brit. Mach. Vis. Conf.*, 2019, pp. 1–13.

[155] H. Wu, J. Zhang, K. Huang, K. Liang, and Y. Yu, "FastFCN: Rethinking dilated convolution in the backbone for semantic segmentation," 2019, *arXiv:1903.11816*.

[156] X. Hu and L. Jing, "LDPNet: A lightweight densely connected pyramid network for real-time semantic segmentation," *IEEE Access*, vol. 8, pp. 212647–212658, 2020.

[157] P. Ding, H. Qian, Y. Zhou, S. Yan, S. Feng, and S. Yu, "Real-time efficient semantic segmentation network based on improved ASPP and parallel fusion module in complex scenes," *J. Real-Time Image Process.*, vol. 20, no. 3, p. 41, Jun. 2023.

[158] W. Zhang, Z. Huang, G. Luo, T. Chen, X. Wang, W. Liu, G. Yu, and C. Shen, "TopFormer: Token pyramid transformer for mobile semantic segmentation," in *Proc. IEEE/CVF Conf. Comput. Vis. Pattern Recognit. (CVPR)*, Jun. 2022, pp. 12073–12083.

[159] J. Wang, C. Gou, Q. Wu, H. Feng, J. Han, E. Ding, and J. Wang, "RTFormer: Efficient design for real-time semantic segmentation with transformer," in *Proc. Neural Inf. Process. Syst.*, 2022.

[160] W. Shi, J. Xu, and P. Gao, "SSformer: A lightweight transformer for semantic segmentation," in *Proc. IEEE 24th Int. Workshop Multimedia Signal Process. (MMSP)*, Sep. 2022, pp. 1–5.

[161] G. Xu, J. Li, G. Gao, H. Lu, J. Yang, and D. Yue, "Lightweight real-time semantic segmentation network with efficient transformer and CNN," *IEEE Trans. Intell. Transp. Syst.*, vol. 24, no. 12, pp. 15897–15906, Dec. 2023.

[162] Q. Zhou, Z. Sun, L. Wang, B. Kang, S. Zhang, and X. Wu, "Mixture lightweight transformer for scene understanding," *Comput. Electr. Eng.*, vol. 108, May 2023, Art. no. 108698.

[163] B. Dong, P. Wang, and F. Wang, "Head-free lightweight semantic segmentation with linear transformer," in *Proc. AAAI Conf. Artif. Intell.*, Jun. 2023, pp. 516–524.

[164] L. Jing, Y. Chen, and Y. Tian, "Coarse-to-fine semantic segmentation from image-level labels," *IEEE Trans. Image Process.*, vol. 29, pp. 225–236, 2020.

[165] Y. Wang, J. Zhang, M. Kan, S. Shan, and X. Chen, "BLPSeg: Balance the label preference in scribble-supervised semantic segmentation," *IEEE Trans. Image Process.*, vol. 32, pp. 4921–4934, 2023.

[166] X. He, J. Liu, W. Wang, and H. Lu, "An efficient sampling-based attention network for semantic segmentation," *IEEE Trans. Image Process.*, vol. 31, pp. 2850–2863, 2022.

[167] J. Li, S. Zha, C. Chen, M. Ding, T. Zhang, and H. Yu, "Attention guided global enhancement and local refinement network for semantic segmentation," *IEEE Trans. Image Process.*, vol. 31, pp. 3211–3223, 2022.

[168] K. Li, Q. Geng, M. Wan, X. Cao, and Z. Zhou, "Context and spatial feature calibration for real-time semantic segmentation," *IEEE Trans. Image Process.*, vol. 32, pp. 5465–5477, 2023.

[169] L. Themyr, C. Rambour, N. Thome, T. Collins, and A. Hostettler, "Full contextual attention for multi-resolution transformers in semantic segmentation," in *Proc. IEEE/CVF Winter Conf. Appl. Comput. Vis. (WACV)*, Jan. 2023, pp. 3223–3232.

[170] E. Courdier, P. Teja, and F. Fleuret, "PAUMER: Patch pausing transformer for semantic segmentation," in *Proc. Brit. Mach. Vis. Conf.*, 2022, pp. 1–22.

[171] F. Lin, S. Wu, Y. Ma, and S. Tian, "Full-scale selective transformer for semantic segmentation," in *Proc. Asian Conf. Comput. Vis.*, 2022, pp. 2663–2679.

[172] Y. Liu, Y. Chen, P. Lasang, and Q. Sun, "Covariance attention for semantic segmentation," *IEEE Trans. Pattern Anal. Mach. Intell.*, vol. 44, no. 4, pp. 1805–1818, Apr. 2022.

[173] Z. Li, Y. Sun, L. Zhang, and J. Tang, "CTNet: Context-based tandem network for semantic segmentation," *IEEE Trans. Pattern Anal. Mach. Intell.*, vol. 44, no. 12, pp. 9904–9917, Dec. 2022.

[174] Y. Jiang, Z. Gan, K. Lin, and A. Yong, "AttNAS: Searching attentions for lightweight semantic segmentation," in *Proc. Brit. Mach. Vis. Conf.*, 2021, pp. 1–13.

[175] M. Chen, X. Zhao, B. Fu, L. Zhang, and X. Xue, "Rethinking local and global feature representation for semantic segmentation," in *Proc. Brit. Mach. Vis. Conf.*, 2021, pp. 1–14.

[176] Y. Zhang, X. Sun, J. Dong, C. Chen, and Q. Lv, "GPNet: Gated pyramid network for semantic segmentation," *Pattern Recognit.*, vol. 115, Jul. 2021, Art. no. 107940.

[177] X. Lian, Y. Pang, J. Han, and J. Pan, "Cascaded hierarchical atrous spatial pyramid pooling module for semantic segmentation," *Pattern Recognit.*, vol. 110, Feb. 2021, Art. no. 107622.

[178] Q. Sun, Z. Zhang, and P. Li, "Second-order encoding networks for semantic segmentation," *Neurocomputing*, vol. 445, pp. 50–60, Jul. 2021.

[179] O. Ronneberger, P. Fischer, and T. Brox, "U-Net: Convolutional networks for biomedical image segmentation," in *Proc. Med. Image Comput. Comput.-Assist. Intervent.*, Jan. 2015, pp. 234–241.

[180] I. A. Kazerouni, G. Dooly, and D. Toal, "Ghost-UNet: An asymmetric encoder–decoder architecture for semantic segmentation from scratch," *IEEE Access*, vol. 9, pp. 97457–97465, 2021.

[181] J. Ji, X. Lu, M. Luo, M. Yin, Q. Miao, and X. Liu, "Parallel fully convolutional network for semantic segmentation," *IEEE Access*, vol. 9, pp. 673–682, 2021.

[182] D. Shen, Y. Ji, P. Li, Y. Wang, and D. Lin, "RANet: Region attention network for semantic segmentation," in *Proc. Neural Inf. Process. Syst.*, 2020, pp. 1–12.

[183] M. Zhong, B. Verma, and J. Affum, "Multi-receptive atrous convolutional network for semantic segmentation," in *Proc. Int. Joint Conf. Neural Netw. (IJCNN)*, Jul. 2020, pp. 1–8.

[184] N. Araslanov and S. Roth, "Single-stage semantic segmentation from image labels," in *Proc. IEEE/CVF Conf. Comput. Vis. Pattern Recognit. (CVPR)*, Jun. 2020, pp. 4252–4261.

[185] C. Peng and J. Ma, "Semantic segmentation using stride spatial pyramid pooling and dual attention decoder," *Pattern Recognit.*, vol. 107, Nov. 2020, Art. no. 107498.

[186] J. Fu, J. Liu, Y. Li, Y. Bao, W. Yan, Z. Fang, and H. Lu, "Contextual deconvolution network for semantic segmentation," *Pattern Recognit.*, vol. 101, May 2020, Art. no. 107152.

[187] Z. Zhu, M. Xu, S. Bai, T. Huang, and X. Bai, "Asymmetric non-local neural networks for semantic segmentation," in *Proc. IEEE/CVF Int. Conf. Comput. Vis. (ICCV)*, Oct. 2019, pp. 593–602.

[188] M. Zhen, J. Wang, L. Zhou, T. Fang, and L. Quan, "Learning fully dense neural networks for image semantic segmentation," in *Proc. AAAI Conf. Artif. Intell.*, Jul. 2019, pp. 9283–9290.

[189] B. Zhao, X. Zhang, Z. Li, and X. Hu, "A multi-scale strategy for deep semantic segmentation with convolutional neural networks," *Neurocomputing*, vol. 365, pp. 273–284, Nov. 2019.

[190] Z. Zhang, X. Zhang, C. Peng, X. Xue, and J. Sun, "ExFuse: Enhancing feature fusion for semantic segmentation," in *Proc. Eur. Conf. Comput. Vis.*, 2018, pp. 269–284.

[191] H. Shi, M. Hayat, and J. Cai, "Transformer scale gate for semantic segmentation," in *Proc. IEEE/CVF Conf. Comput. Vis. Pattern Recognit. (CVPR)*, Jun. 2023, pp. 3051–3060.

[192] E. Zhou, X. Xu, B. Xu, and H. Wu, "An enhancement model based on dense atrous and inception convolution for image semantic segmentation," *Appl. Intell.*, vol. 53, no. 5, pp. 5519–5531, 2023.

[193] X. Zhang, Y. Wei, Z. Li, C. Yan, and Y. Yang, "Rich embedding features for one-shot semantic segmentation," *IEEE Trans. Neural Netw. Learn. Syst.*, vol. 33, no. 11, pp. 6484–6493, Nov. 2022.

[194] B. Li, K. Q. Weinberger, S. Belongie, V. Koltun, and R. Ranftl, "Language-driven semantic segmentation," in *Proc. Int. Conf. Learn. Represent.*, 2022, pp. 1–13.

[195] T. Kalb and J. Beyerer, "Causes of catastrophic forgetting in class-incremental semantic segmentation," in *Proc. Asian Conf. Comput. Vis.*, Jan. 2023, pp. 56–73.

[196] J. Ding, N. Xue, G. Xia, and D. Dai, "Decoupling zero-shot semantic segmentation," in *Proc. IEEE/CVF Conf. Comput. Vis. Pattern Recognit. (CVPR)*, Jun. 2022, pp. 11573–11582.

[197] F. Yu, V. Koltun, and T. Funkhouser, "Dilated residual networks," in *Proc. IEEE Conf. Comput. Vis. Pattern Recognit. (CVPR)*, Jul. 2017, pp. 636–644.

[198] J. Peng, Y. Liu, S. Tang, Y. Hao, L. Chu, G. Chen, Z. Wu, Z. Chen, Z. Yu, Y. Du, Q. Dang, B. Lai, Q. Liu, X. Hu, D. Yu, and Y. Ma, "PP-LiteSeg: A superior real-time semantic segmentation model," 2022, *arXiv:2204.02681*.

[199] O. Russakovsky, J. Deng, H. Su, J. Krause, S. Satheesh, S. Ma, Z. Huang, A. Karpathy, A. Khosla, M. Bernstein, A. C. Berg, and L. Fei-Fei, "ImageNet large scale visual recognition challenge," *Int. J. Comput. Vis.*, vol. 115, no. 3, pp. 211–252, Dec. 2015.

[200] H. Zhang, H. Zhang, C. Wang, and J. Xie, "Co-occurrent features in semantic segmentation," in *Proc. IEEE/CVF Conf. Comput. Vis. Pattern Recognit. (CVPR)*, Jun. 2019, pp. 548–557.

[201] G. Wang, Y. Zhao, C. Tang, C. Luo, and W. Zeng, "When shift operation meets vision transformer: An extremely simple alternative to attention mechanism," in *Proc. AAAI Conf. Artif. Intell.*, Jun. 2022, pp. 2423–2430.

[202] T.-Y. Lin, M. Maire, S. Belongie, J. Hays, P. Perona, D. Ramanan, P. Dollár, and C. L. Zitnick, "Microsoft COCO: Common objects in context," in *Proc. Eur. Conf. Comput. Vis.*, Jan. 2014, pp. 740–755.

[203] A. Geiger, P. Lenz, and R. Urtasun, "Are we ready for autonomous driving? The KITTI vision benchmark suite," in *Proc. IEEE Conf. Comput. Vis. Pattern Recognit.*, Jun. 2012, pp. 3354–3361.

[204] J. M. Álvarez, T. Gevers, Y. LeCun, and A. M. López, "Road scene segmentation from a single image," in *Proc. Eur. Conf. Comput. Vis.*, Jan. 2012, pp. 376–389.

[205] X. Chen, R. Mottaghi, X. Liu, S. Fidler, R. Urtasun, and A. Yuille, "Detect what you can: Detecting and representing objects using holistic models and body parts," in *Proc. IEEE Conf. Comput. Vis. Pattern Recognit.*, Jun. 2014, pp. 1979–1986.

[206] S. Gould, R. Fulton, and D. Koller, "Decomposing a scene into geometric and semantically consistent regions," in *Proc. IEEE 12th Int. Conf. Comput. Vis.*, Sep. 2009, pp. 1–8.

[207] B. Hariharan, P. Arbeláez, L. Bourdev, S. Maji, and J. Malik, "Semantic contours from inverse detectors," in *Proc. Int. Conf. Comput. Vis.*, Nov. 2011, pp. 991–998.

[208] D. Martin, C. Fowlkes, D. Tal, and J. Malik, "A database of human segmented natural images and its application to evaluating segmentation algorithms and measuring ecological statistics," in *Proc. 8th IEEE Int. Conf. Comput. Vis.*, Oct. 2001, pp. 416–423.

[209] A. Prest, C. Leistner, J. Civera, C. Schmid, and V. Ferrari, "Learning object class detectors from weakly annotated video," in *Proc. IEEE Conf. Comput. Vis. Pattern Recognit.*, Jun. 2012, pp. 3282–3289.

[210] N. Atif, S. Mazhar, S. R. Ahamed, M. K. Bhuyan, S. Alfarhood, and M. Safran, "DMPNet: Distributed multi-scale pyramid network for real-time semantic segmentation," *IEEE Access*, vol. 12, pp. 16573–16585, 2024.

[211] Z. Du and Y. Liang, "Research on image semantic segmentation based on hybrid cascade feature fusion and detailed attention mechanism," *IEEE Access*, vol. 12, pp. 62365–62377, 2024.

[212] K. I. Rashid, C. Yang, and C. Huang, "Fast-DSAGCN: Enhancing semantic segmentation with multifaceted attention mechanisms," *Neurocomputing*, vol. 587, Jun. 2024, Art. no. 127625.

[213] G. Yang, Y. Wang, and D. Shi, "Reparameterizable dual-resolution network for real-time semantic segmentation," 2024, *arXiv:2406.12496*.

[214] Z. Guo, L. Bian, X. Huang, H. Wei, J. Li, and H. Ni, "DSNet: A novel way to use atrous convolutions in semantic segmentation," 2024, *arXiv:2406.03702*.

[215] S. Erisen, "SERNet-former: Semantic segmentation by efficient residual network with attention-boosting gates and attention-fusion networks," 2024, *arXiv:2401.15741*.

[216] Q. Liu, C. Wang, Z. Li, Y. Qi, and J. Fang, "Attention based lightweight asymmetric network for real-time semantic segmentation," *Eng. Appl. Artif. Intell.*, vol. 130, Apr. 2024, Art. no. 107736.

[217] X. Song, X. Fang, X. Meng, X. Fang, M. Lv, and Y. Zhuo, "Real-time semantic segmentation network with an enhanced backbone based on atrous spatial pyramid pooling module," *Eng. Appl. Artif. Intell.*, vol. 133, Jul. 2024, Art. no. 107988.

[218] A. Gu and T. Dao, "Mamba: Linear-time sequence modeling with selective state spaces," 2023, *arXiv:2312.00752*.

[219] H. Ding, B. Xia, W. Liu, Z. Zhang, J. Zhang, X. Wang, and S. Xu, "A novel mamba architecture with a semantic transformer for efficient real-time remote sensing semantic segmentation," *Remote Sens.*, vol. 16, no. 14, p. 2620, Jul. 2024.

[220] Q. Zhu, Y. Cai, Y. Fang, Y. Yang, C. Chen, L. Fan, and A. Nguyen, "Samba: Semantic segmentation of remotely sensed images with state space model," 2024, *arXiv:2404.01705*.

[221] E. Zhu, Z. Chen, D. Wang, H. Shi, X. Liu, and L. Wang, "UNet-Mamba: An efficient UNet-like mamba for semantic segmentation of high-resolution remote sensing images," 2024, *arXiv:2408.11545*.

[222] M. Liu, J. Dan, Z. Lu, Y. Yu, Y. Li, and X. Li, "CM-UNet: Hybrid CNN-mamba UNet for remote sensing image semantic segmentation," 2024, *arXiv:2405.10530*.

[223] L. Wang, D. Li, S. Dong, X. Meng, X. Zhang, and D. Hong, "PyramidMamba: Rethinking pyramid feature fusion with selective space state model for semantic segmentation of remote sensing imagery," 2024, *arXiv:2406.10828*.

[224] A. Khan, M. Asad, M. Benning, C. Roney, and G. Slabaugh, "CAMS: Convolution and attention-free mamba-based cardiac image segmentation," 2024, *arXiv:2406.05786*.

[225] W. Liao, Y. Zhu, X. Wang, C. Pan, Y. Wang, and L. Ma, "LightM-UNet: Mamba assists in lightweight UNet for medical image segmentation," 2024, *arXiv:2403.05246*.

[226] Z. Wang, J.-Q. Zheng, Y. Zhang, G. Cui, and L. Li, "Mamba-UNet: UNet-like pure visual mamba for medical image segmentation," 2024, *arXiv:2402.05079*.

[227] J. Ma, F. Li, and B. Wang, "U-mamba: Enhancing long-range dependency for biomedical image segmentation," 2024, *arXiv:2401.04722*.

[228] M. Zhang, Z. Chen, Y. Ge, and X. Tao, "HMT-UNet: A hybird mamba-transformer vision UNet for medical image segmentation," 2024, *arXiv:2408.11289*.

[229] H. Peng, S. Xiang, M. Chen, H. Li, and Q. Su, "DCN-Deeplabv3+: A novel road segmentation algorithm based on improved Deeplabv3+," *IEEE Access*, vol. 12, pp. 87397–87406, 2024.

[230] J. Qian, J. Ci, H. Tan, W. Xu, Y. Jiao, and P. Chen, "Cloud detection method based on improved DeeplabV3+ remote sensing image," *IEEE Access*, vol. 12, pp. 9229–9242, 2024.

[231] P. Yang, C. Li, C. Fang, S. Kong, Y. Jin, K. Li, H. Li, X. Huang, and Y. Han, "MSGFormer: A DeepLabv3+ like semantically masked and pixel contrast transformer for MouseHole segmentation," *IEEE Access*, vol. 12, pp. 33544–33554, 2024.

[232] I. Ahmad, J. Amin, M. I. Lali, F. Abbas, and M. I. Sharif, "A novel Deeplabv3+ and vision-based transformer model for segmentation and classification of skin lesions," *Biomed. Signal Process. Control*, vol. 92, Jun. 2024, Art. no. 106084.

[233] Y. Liu, X. Bai, J. Wang, G. Li, J. Li, and Z. Lv, "Image semantic segmentation approach based on DeepLabV3 plus network with an attention mechanism," *Eng. Appl. Artif. Intell.*, vol. 127, Jan. 2024, Art. no. 107260.

[234] X. Dong, J. Bao, D. Chen, W. Zhang, N. Yu, L. Yuan, D. Chen, and B. Guo, "CSWin transformer: A general vision transformer backbone with cross-shaped windows," in *Proc. IEEE/CVF Conf. Comput. Vis. Pattern Recognit. (CVPR)*, Jun. 2022, pp. 12114–12124.

[235] C. I. López-González, E. Gascó, F. Barrientos-Espillco, E. Besada-Portas, and G. Pajares, "Filter pruning for convolutional neural networks in semantic image segmentation," *Neural Netw.*, vol. 169, pp. 713–732, Jan. 2024.

[236] Q. Tang, B. Zhang, J. Liu, F. Liu, and Y. Liu, "Dynamic token pruning in plain vision transformers for semantic segmentation," in *Proc. IEEE/CVF Int. Conf. Comput. Vis. (ICCV)*, Oct. 2023, pp. 777–786.

[237] H. Bai, H. Mao, and D. Nair, "Dynamically pruning segformer for efficient semantic segmentation," in *Proc. IEEE Int. Conf. Acoust., Speech Signal Process. (ICASSP)*, May 2022, pp. 3298–3302.

[238] H. Caesar, J. Uijlings, and V. Ferrari, "COCO-stuff: Thing and stuff classes in context," in *Proc. IEEE/CVF Conf. Comput. Vis. Pattern Recognit.*, Jun. 2018, pp. 1209–1218.

CRISTINA CĂRUNTA received the B.S. degree in mathematics from West University of Timişoara, in 2019, the B.S. degree in computers and information technology from Politehnica University of Timişoara, in 2020, the M.S. degree in mathematics from West University of Timişoara, in 2021, and the M.S. degree in machine learning from Politehnica University of Timişoara, in 2022. Currently, she is a Ph.D. Researcher in machine learning with Politehnica University of Timişoara. Her research interest includes image processing using deep learning techniques.

ALINA CĂRUNTA received the B.S. degree in computer science and the M.S. degree in artificial intelligence and distributed computing from West University of Timişoara, in 2015 and 2017, respectively. Currently, she is a Ph.D. Researcher in complex networks analysis with West University of Timişoara. Her research interest includes artificial intelligence.

CĂLIN-ADRIAN POPA (Member, IEEE) received the bachelor's degree in computer science and information technology and the master's degree in software engineering from Politehnica University of Timişoara, in 2009 and 2011, respectively, the bachelor's and master's degrees in mathematics from West University of Timişoara, in 2013 and 2015, respectively, and the Ph.D. degree in computer science and information technology from Politehnica University of Timişoara, in 2015. Currently, he is a Professor with the Department of Computer and Information Technology, Politehnica University of Timişoara. He is interested in neural networks and deep learning.